YAMAHA

PARTS CATALOGUE

YFM70RSEW (1S3E) U.S.A.
YFM70RSEW (1S3F) CANADA
YFM70RSEW (1S3G) EUROPE
YFM70RSEW (1S3E) OCEANIA

1F1S3-100EK

(2F1S3-100EK)

YAMAHA GENUINE Parts & Accessories

2009/11/10

NEWS NO.	DATE	COMMENT
PE0-MC-080004	Jan.,23,2008	FIG.10:THROTTLE BODY ASSY 1 LIST/ILLUST REVISION
PE0-MC-080035	Jul.,30,2008	FIG.25:FRONT SUSPENSION & WHEEL ILLUSTRATION CORRECTION
PE0-MC-090052	Jul.,30,2009	FIG.16:TRANSMISSION LIST CORRECTION
PE0-MC-090060	Aug.,3,2009	FIG.33:FRONT MASTER CYLINDER LIST CORRECTION
PE0-MC-090077	Oct.,23,2009	FIG.17 SHIFT CAM & FORK LIST/ILLUST. CORRECTION

YFM70RSEW
PARTS CATALOGUE
©2006 by Yamaha Motor Co., Ltd.
1st edition, December 2006
All rights reserved.
Any reprinting or unauthorized use
without the written permission of
Yamaha Motor Co., Ltd.
is expressly prohibited.

A3

FOREWORD

This Parts Catalogue is related to the parts for the model(s) on the cover page. When you are ordering replacement parts, please refer to this Parts Catalogue and quote both part numbers and part names correctly.

1. Modifications or additions which have been made after the issue of the Parts Catalogue will be announced in the Parts News.
   It is advisable that you make the necessary corrections to the Parts Catalogue according to the Parts News.

2. Abbreviations
   The following abbreviations are used in this Parts Catalogue.

   “UR” Use specified parts number.
   “UN” Use as many as needed.
   “AP” Alternate Parts
   “LM” Locally Made (Parts need to be ordered locally)
   “F#” Frame No. (Applicable machine No.)
   “O/S” Over Size

3. The number of components for assembly
   - Parts, which are to be supplied in an assembly, are listed with a dot (.) in front of the part name as shown below.
   - The numeral appearing to the right of each component part indicates the quantity of parts for each assembly unit.

PART NO.	DESCRIPTION	Q’TY	REMARKS
2F5–83310–60	FRONT FLASHER LIGHT ASSY	2	
115–83311–60	.BULB (6V–18W)	1	

4. Applicable colours of graphics are represented in the “REMARKS” as shown below.

PART NO.	DESCRIPTION	Q’TY	REMARKS
2N4–24110–00–X5	FUEL TANK COMP.	2	MXR
3J1–24240–10	.GRAPHIC, FUEL TANK	1	FOR MXR

5. Note that the illustrations for reference in finding parts numbers are not to be used for assembling. When assembling, please use the applicable service manual.

6. The asterisk (*) before a reference number indicates modified items after the first edition.

7. Applicable Serial No.

Engine Serial No.

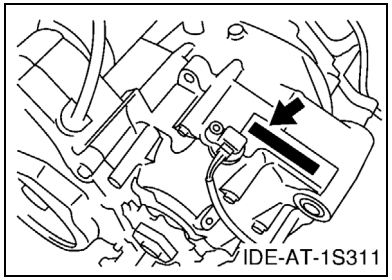

Frame Serial No.

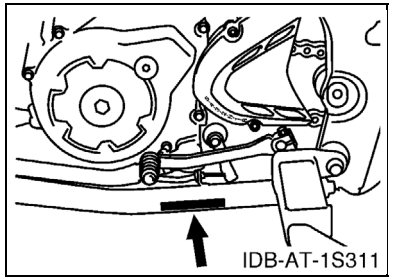

8. Applicable Colour Code (The (*) mark shows Model colour.)

Abbreviation	Colour Name	Colour Code
BWS1(*)	BLUISH WHITE SOLID 1	0892

9. Quantity Column Information

Column No.	Name Of Q'ty Column	Destination
1	USA	U.S.A.
2	CAN	CANADA
3	EUR	EUROPE
4	OCE	OCEANIA

MODEL LABEL

(1) A label called “Model Label” is affixed in the location as indicated in (3) below. When using this parts catalogue, please be sure to cross–reference the “model code – production code No.” in the catalogue with the “model code – production code No.” indicated on the Model Label affixed onto the product concerned.

(2) “Model Label” Indication

a b ○ xxxx – xxx ● x c	a: Model Type Code b: Production Code No. c: Colouring Type

○ 4TW1–010 ● A

(3) Model Label Affixing Location

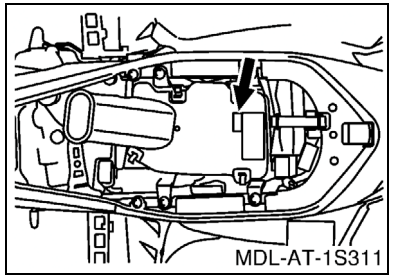

(4) Colouring Information

Model Code	Colouring Type Code	Colour Code	Colour Name	Abbreviation
1S3E	A	0892	BLUISH WHITE SOLID 1	BWS1
1S3F	A	0892	BLUISH WHITE SOLID 1	BWS1
1S3G	A	0892	BLUISH WHITE SOLID 1	BWS1

(5) Model Code – Production Code Number of Model Listed in This Parts Catalogue

Model Code	Production Code No.	Country (destination)
1S3E	010	U.S.A.
	020	AUSTRALIA
		NEW ZEALAND
1S3F	010	CANADA
1S3G	010	EUROPE

Model Code	Production Code No.	Country (destination)

CONTENTS

ENGINE

CYLINDER HEAD B2
CYLINDER B3
CRANKSHAFT & PISTON B4
VALVE B5
CAMSHAFT & CHAIN B6
WATER PUMP B7
RADIATOR & HOSE B8
OIL PUMP B9
INTAKE B11
THROTTLE BODY ASSY 1 ..... B13
EXHAUST B14
CRANKCASE B15
CRANKCASE COVER 1 ..... C2
STARTER C3
CLUTCH C4
TRANSMISSION C6
SHIFT CAM & FORK C8

CHASSIS

FRAME C10
FRONT FENDER C12
REAR FENDER C13
OIL TANK C15
REAR ARM D2
REAR SUSPENSION D5
STEERING D6
FRONT SUSPENSION & WHEEL D7
FUEL TANK D9
SEAT D11
FRONT WHEEL D12
FRONT BRAKE CALIPER D13
REAR WHEEL D15
REAR BRAKE CALIPER E2
STEERING HANDLE & CABLE E4
FRONT MASTER CYLINDER E6
STAND & FOOTREST E7
REAR MASTER CYLINDER E8
GUARD E10
GENERATOR E11
STARTING MOTOR E12
HEADLIGHT E13
TAILLIGHT E14
TAILLIGHT 2 ..... E15
HANDLE SWITCH & LEVER F2
ELECTRICAL 1 ..... F3
ELECTRICAL 2 ..... F6
EMBLEM & LABEL 1 ..... F7
EMBLEM & LABEL 2 ..... F8
EMBLEM & LABEL 3 ..... F9
EMBLEM & LABEL 4 ..... F10

ALTERNATE PARTS

ALTERNATE FOR METER F11

INDEX

NUMERICAL INDEX M1

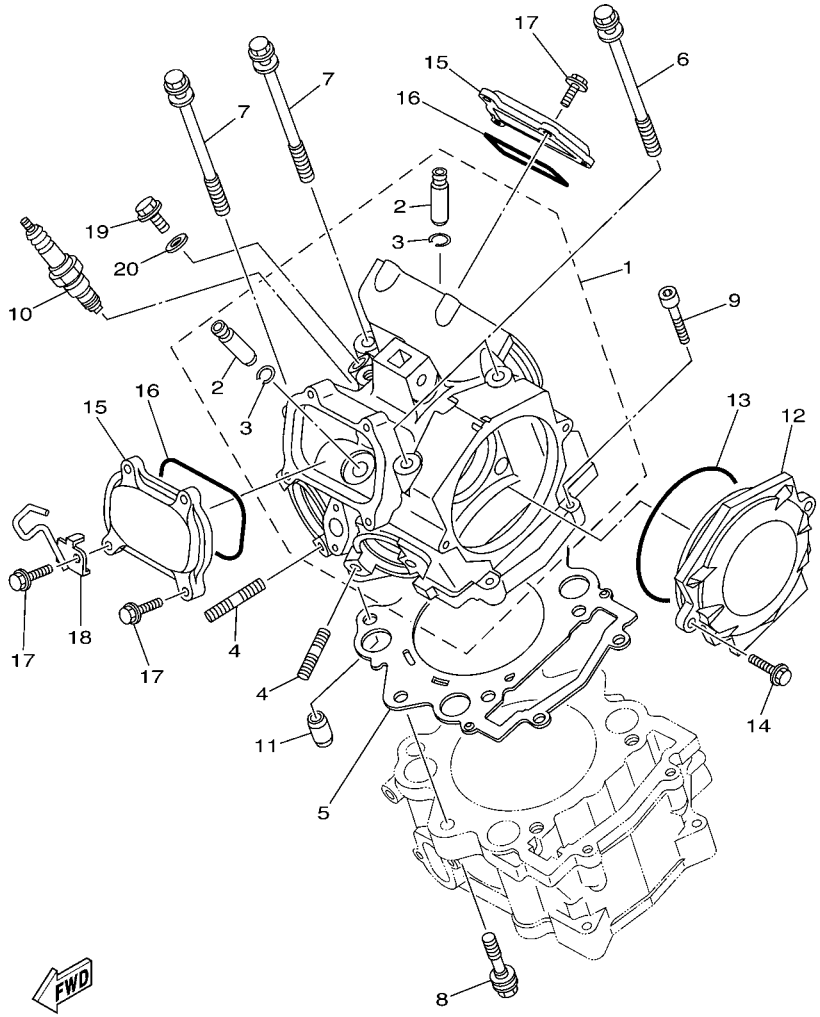

1S31100-E010

FIG. 1 CYLINDER HEAD

REF. NO.	PART NO.	DESCRIPTION	USA	CAN	EUR	OCE		REMARKS
1	1S3–11101–00	CYLINDER HEAD ASSY	1	1	1	1		
2	4G0–11133–11	.GUIDE, VALVE 1	4	4	4	4		
3	93440–10085	.CIRCLIP	4	4	4	4		
4	95612–08625	BOLT, STUD	4	4	4	4		
5	3B4–11181–00	GASKET, CYLINDER HEAD 1	1	1	1	1		
6	90109–09003	BOLT	2	2	2	2		
7	90109–09002	BOLT	2	2	2	2		
8	90109–09005	BOLT	2	2	2	2		
9	91312–06030	BOLT	2	2	2	2		
10	94701–00330	PLUG, SPARK (NGK CR8E)	1	1	1	1		
11	93612–16254	PIN, DOWEL	2	2	2	2		
12	1S3–11185–00	COVER, CYLINDER HEAD SIDE 1	1	1	1	1		
13	93210–96601	O-RING	1	1	1	1		
14	95022–06020	BOLT, FLANGE	2	2	2	2		
15	1S3–11186–00	COVER, CYLINDER HEAD SIDE 2	2	2	2	2		
16	93210–78544	O-RING	2	2	2	2		
17	95022–06020	BOLT, FLANGE	8	8	8	8		
18	1S3–1131E–00	HOLDER 1	1	1	1	1		
19	90401–08004	BOLT, UNION	1	1	1	1		
20	90430–08119	GASKET	1	1	1	1		

FIG. 2 CYLINDER

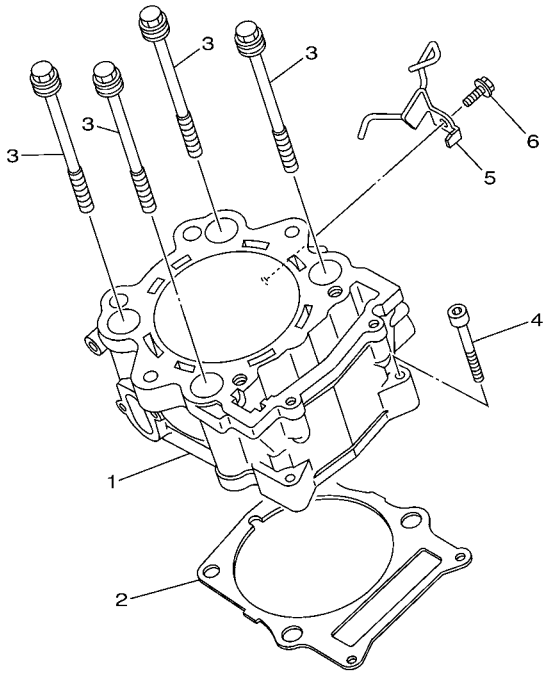

1S31100-E020

REF. NO.	PART NO.	DESCRIPTION	USA	CAN	EUR	OCE		REMARKS
1	1S3–11310–00	CYLINDER	1	1	1	1		
2	1S3–11351–00	GASKET, CYLINDER	1	1	1	1		
3	90119–10023	BOLT, WITH WASHER	4	4	4	4		
4	91312–06040	BOLT	2	2	2	2		
5	1S3–11395–00	HOLDER	1	1	1	1		
6	95822–06012	BOLT, FLANGE	1	1	1	1		

FIG. 3 CRANKSHAFT & PISTON

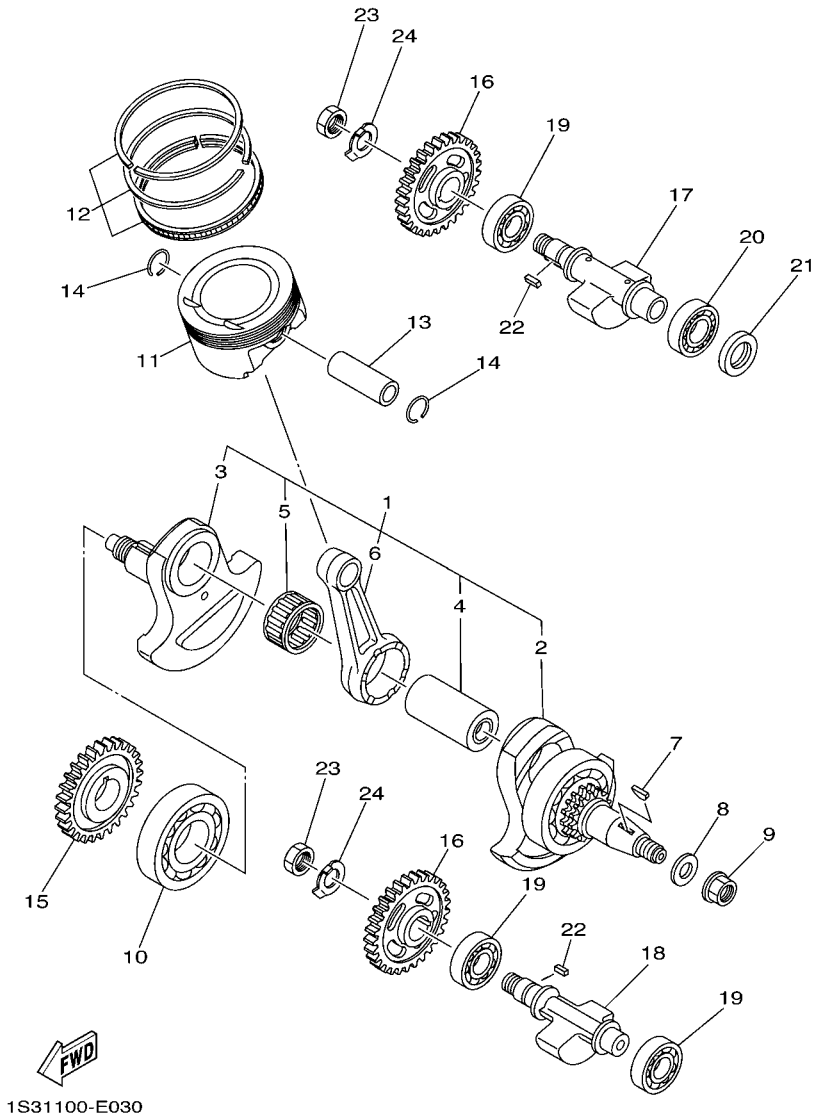

REF. NO.	PART NO.	DESCRIPTION	USA	CAN	EUR	OCE		REMARKS
1	1S3–11400–00	CRANKSHAFT ASSY	1	1	1	1		
2	1S3–11401–09	.CRANK SUB ASSY 1	1	1	1	1		
3	1S3–11422–00	.CRANK 2	1	1	1	1		
4	1S3–11681–00	.PIN, CRANK 1	1	1	1	1		
5	93310–84017	.BEARING	1	1	1	1		
6	1S3–11651–00	.ROD, CONNECTING	1	1	1	1		
7	90280–05001	KEY, WOODRUFF	1	1	1	1		
8	90201–16013	WASHER, PLATE	1	1	1	1		
9	90179–16004	NUT	1	1	1	1		
10	93306–30810	BEARING	1	1	1	1		
11	1S3–11631–10	PISTON (STD)	1	1	1	1		
12	1S3–11603–10	PISTON RING SET (STD)	1	1	1	1		
13	5VK–11633–00	PIN, PISTON	1	1	1	1		
14	93450–24154	CIRCLIP	2	2	2	2		
15	1S3–11536–00	GEAR, DRIVE	1	1	1	1		
16	1S3–11531–00	GEAR, BALANCE WEIGHT	2	2	2	2		
17	1S3–11454–00	WEIGHT 1	1	1	1	1		
18	1S3–11464–00	WEIGHT 2	1	1	1	1		
19	93306–20481	BEARING	3	3	3	3		
20	93306–00502	BEARING	1	1	1	1		
21	93101–25106	OIL SEAL	1	1	1	1		
22	90282–05005	KEY, STRAIGHT	2	2	2	2		
23	90170–16326	NUT	2	2	2	2		
24	90215–16221	WASHER, LOCK	2	2	2	2		

FIG. 4 VALVE

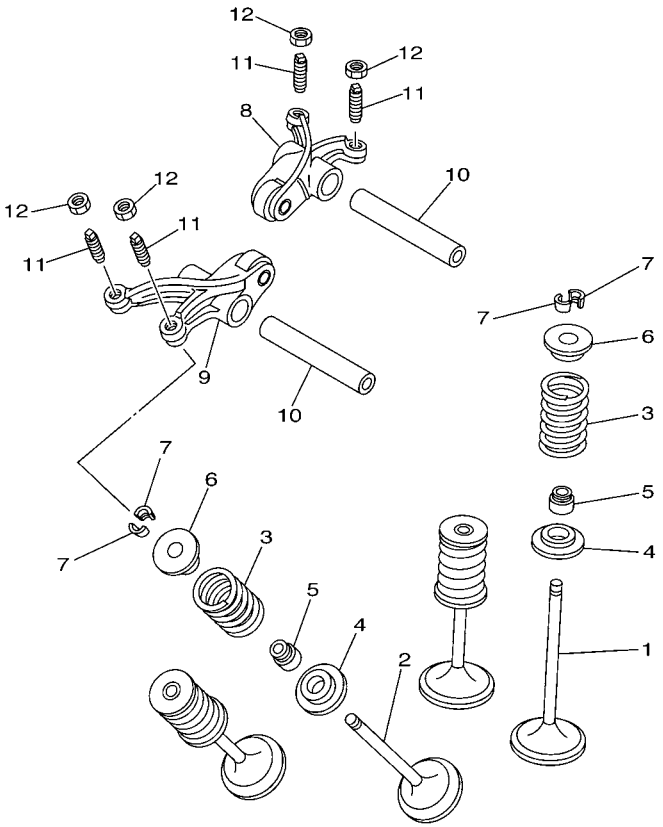

1S31100-E040

REF. NO.	PART NO.	DESCRIPTION	USA	CAN	EUR	OCE		REMARKS
1	5VK–12111–00	VALVE, INTAKE	2	2	2	2		
2	5VK–12121–00	VALVE, EXHAUST	2	2	2	2		
3	1S3–12113–00	SPRING, VALVE INNER	4	4	4	4		
4	3YF–12116–00	SEAT, VALVE SPRING	4	4	4	4		
5	5H0–12119–00	SEAL, VALVE STEM	4	4	4	4		
6	3YF–12117–01	RETAINER, VALVE SPRING	4	4	4	4		
7	4G0–12118–00	COTTER, VALVE	8	8	8	8		
8	5VK–12151–00	ARM, VALVE ROCKER	1	1	1	1		
9	5VK–12161–00	ARM, VALVE ROCKER 2	1	1	1	1		
10	5VK–12146–00	SHAFT, ROCKER	2	2	2	2		
11	5XT–12159–00	SCREW, VALVE ADJUSTING	4	4	4	4		
12	90170–06128	NUT	4	4	4	4		

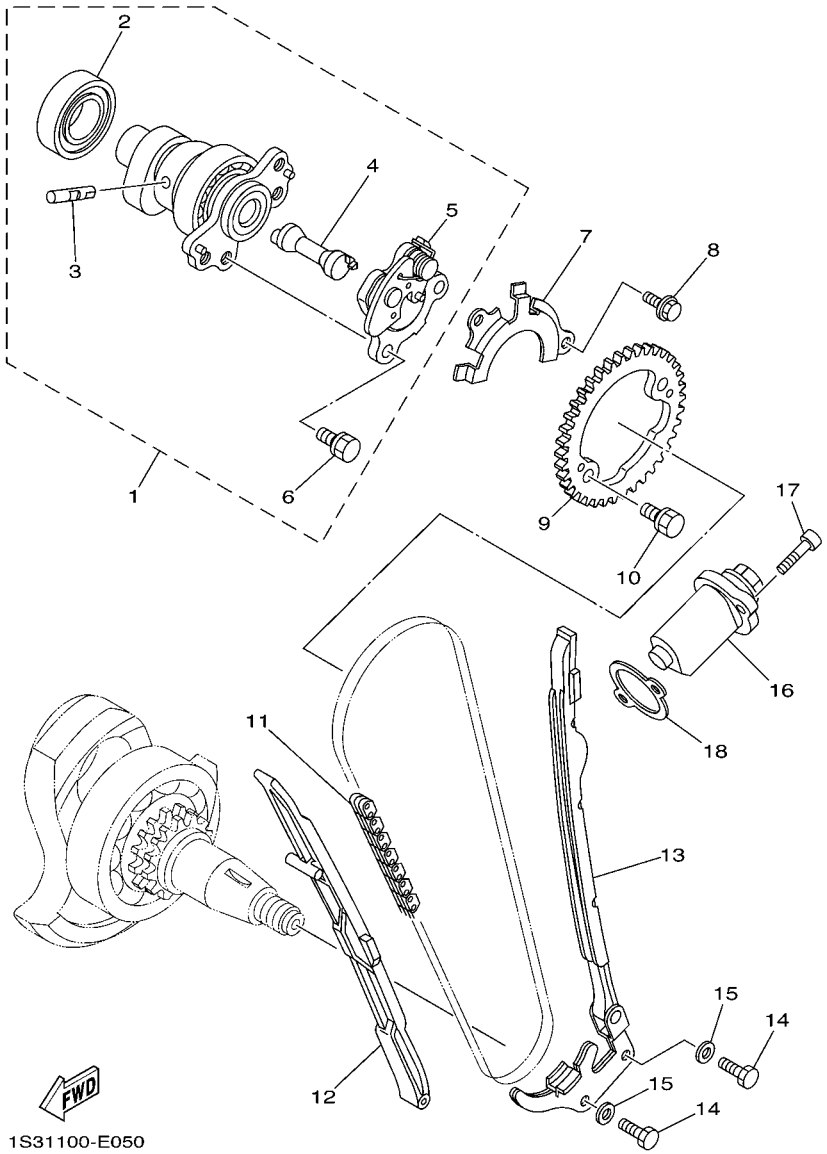

FIG. 5 CAMSHAFT & CHAIN

REF. NO.	PART NO.	DESCRIPTION	USA	CAN	EUR	OCE		REMARKS
1	1S3–12170–00	CAMSHAFT ASSY 1	1	1	1	1		
2	93306–07209	.BEARING	1	1	1	1		
3	5VK–12284–00	.PIN, DECOMPRESSION LEVER	1	1	1	1		
4	1S3–12290–00	.LEVER, DECOMPRESSION SPRING	1	1	1	1		
5	1S3–12280–00	.DECOMPRESSION ASSY	1	1	1	1		
6	90105–07004	.BOLT, FLANGE	2	2	2	2		
7	5VK–1111F–00	PLATE	1	1	1	1		
8	90105–06078	BOLT, FLANGE	2	2	2	2		
9	1S3–12176–00	SPROCKET, CAM CHAIN	1	1	1	1		
10	90105–07004	BOLT, FLANGE	2	2	2	2		
11	94591–57126	CHAIN (98XRH2010-126M)	1	1	1	1		
12	5VK–12231–00	GUIDE, STOPPER 1	1	1	1	1		
13	1S3–12241–00	GUIDE, STOPPER 2	1	1	1	1		
14	97022–06016	BOLT	2	2	2	2		
15	92902–06600	WASHER, PLATE	2	2	2	2		
16	3TB–12210–00	TENSIONER ASSY, CAM CHAIN	1	1	1	1		
17	91312–06025	BOLT	2	2	2	2		
18	4DW–12213–00	GASKET, TENSIONER CASE	1	1	1	1		

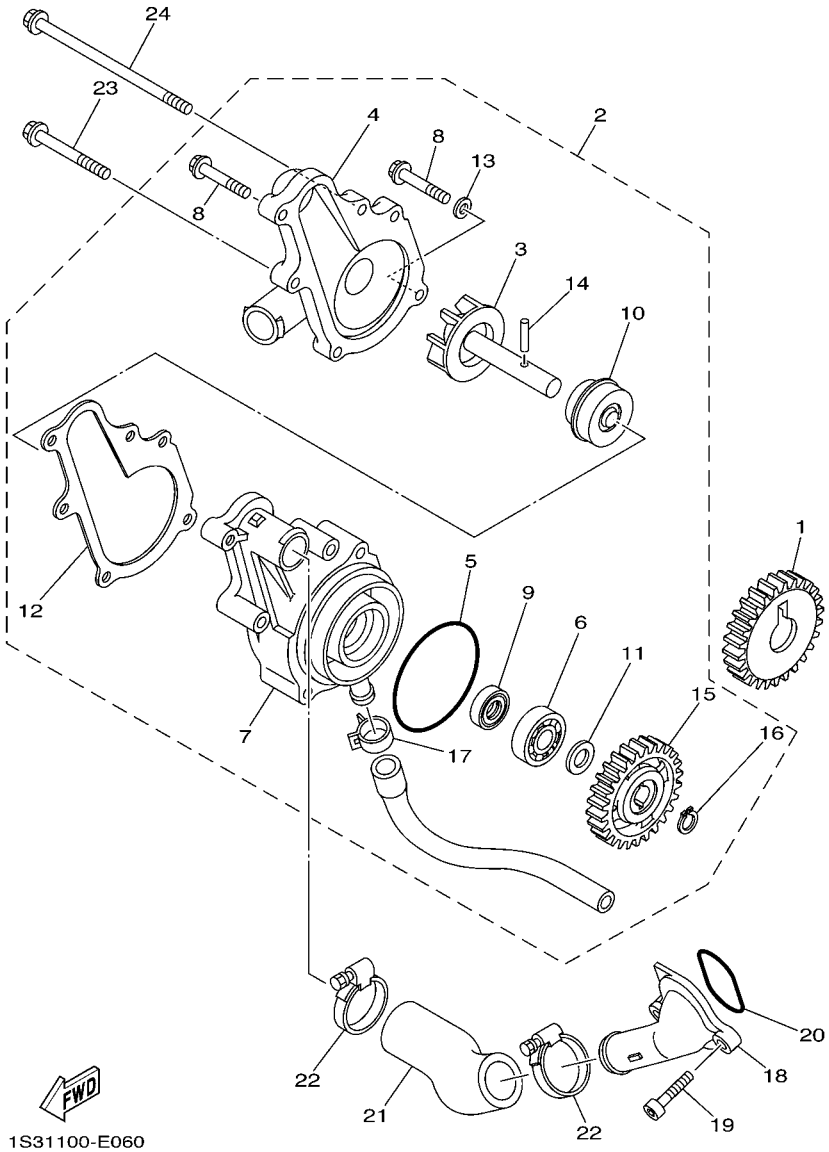

FIG. 6 WATER PUMP

REF. NO.	PART NO.	DESCRIPTION	USA	CAN	EUR	OCE		REMARKS
1	1S3–12436–00	GEAR, DRIVE	1	1	1	1		
2	1S3–12420–00	WATER PUMP ASSY	1	1	1	1		
3	1S3–12450–00	.IMPELLER SHAFT ASSY	1	1	1	1		
4	1S3–12422–00	.COVER, HOUSING	1	1	1	1		
5	93210–61750	.O-RING	1	1	1	1		
6	93306–00106	.BEARING	1	1	1	1		
7	1S3–12421–00	.HOUSING, WATER PUMP	1	1	1	1		
8	95022–06025	.BOLT, FLANGE	3	3	3	3		
9	93101–12173	.OIL SEAL	1	1	1	1		
10	11H–12438–10	.SEAL, MECHANICAL	1	1	1	1		
11	90201–12541	.WASHER, PLATE	1	1	1	1		
12	1S3–12428–00	.GASKET, HOUSING COVER 2	1	1	1	1		
13	90430–06014	.GASKET	1	1	1	1		
14	93603–16219	.PIN, DOWEL	1	1	1	1		
15	5VK–12459–00	.GEAR, IMPELLER SHAFT	1	1	1	1		
16	99009–12400	.CIRCLIP	1	1	1	1		
17	90467–13062	.CLIP	1	1	1	1		
18	1S3–12469–00	JOINT 1	1	1	1	1		
19	91312–06020	BOLT	2	2	2	2		
20	93210–33786	O-RING	1	1	1	1		
21	1S3–12577–00	HOSE 2	1	1	1	1		
22	90450–32015	HOSE CLAMP ASSY	2	2	2	2		
23	95022–06050	BOLT, FLANGE	2	2	2	2		
24	95022–06110	BOLT, FLANGE	1	1	1	1		

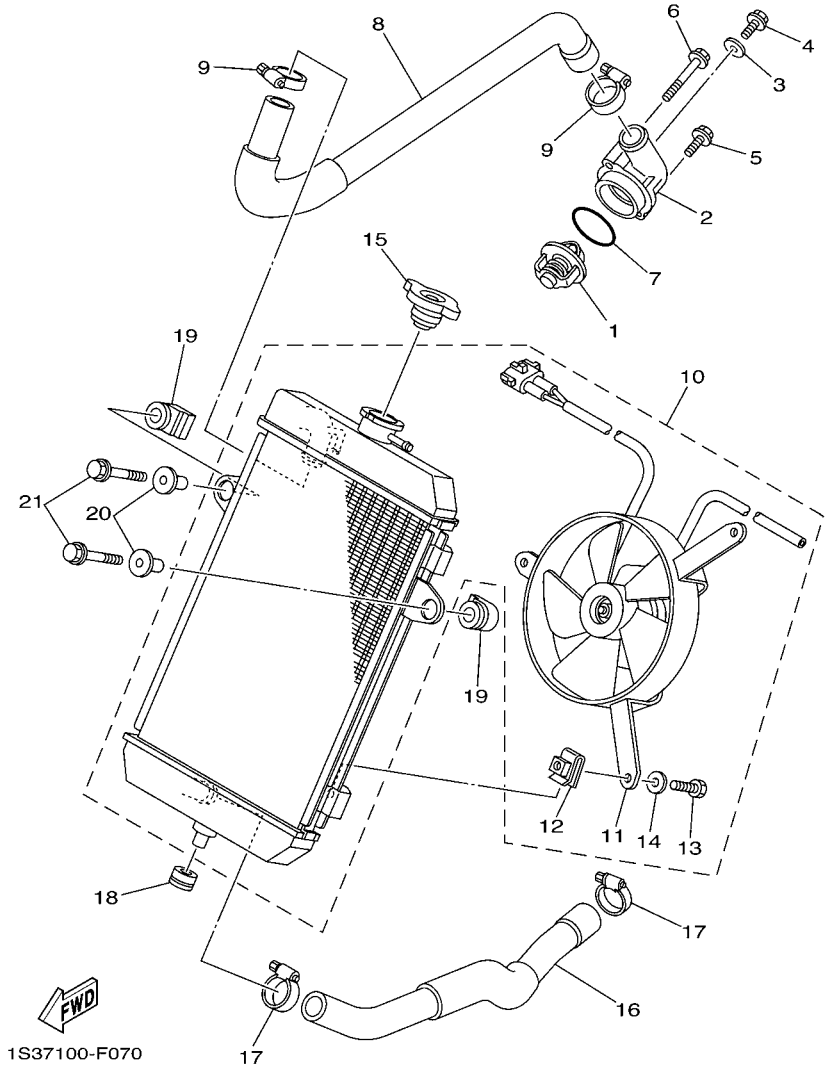

FIG. 7 RADIATOR & HOSE

REF. NO.	PART NO.	DESCRIPTION	USA	CAN	EUR	OCE		REMARKS
1	5VK–12410–00	THERMOSTAT ASSY	1	1	1	1		
2	1S3–12413–00	COVER, THERMOSTAT	1	1	1	1		
3	90430–06014	GASKET	1	1	1	1		
4	95022–06010	BOLT, FLANGE	1	1	1	1		
5	95022–06020	BOLT, FLANGE	1	1	1	1		
6	95022–06045	BOLT, FLANGE	1	1	1	1		
7	93210–41042	O-RING	1	1	1	1		
8	1S3–12578–00	HOSE 3	1	1	1	1		
9	90450–32015	HOSE CLAMP ASSY	2	2	2	2		
10	1S3–1240A–00	RADIATOR ASSY	1	1	1	1		
11	1S3–12405–00	.BLOWER ASSY	1	1	1	1		
12	1AA–12535–00	.PLATE	3	3	3	3		
13	97017–06010	.BOLT	3	3	3	3		
14	92907–06600	.WASHER, PLATE	3	3	3	3		
15	22W–12462–00	CAP, RADIATOR	1	1	1	1		
16	1S3–12579–00	HOSE 4	1	1	1	1		
17	90450–32015	HOSE CLAMP ASSY	2	2	2	2		
18	90480–18330	GROMMET	1	1	1	1		
19	1S3–12465–00	DAMPER, RADIATOR	2	2	2	2		
20	90387–06166	COLLAR	2	2	2	2		
21	95802–06030	BOLT, FLANGE	2	2	2	2		

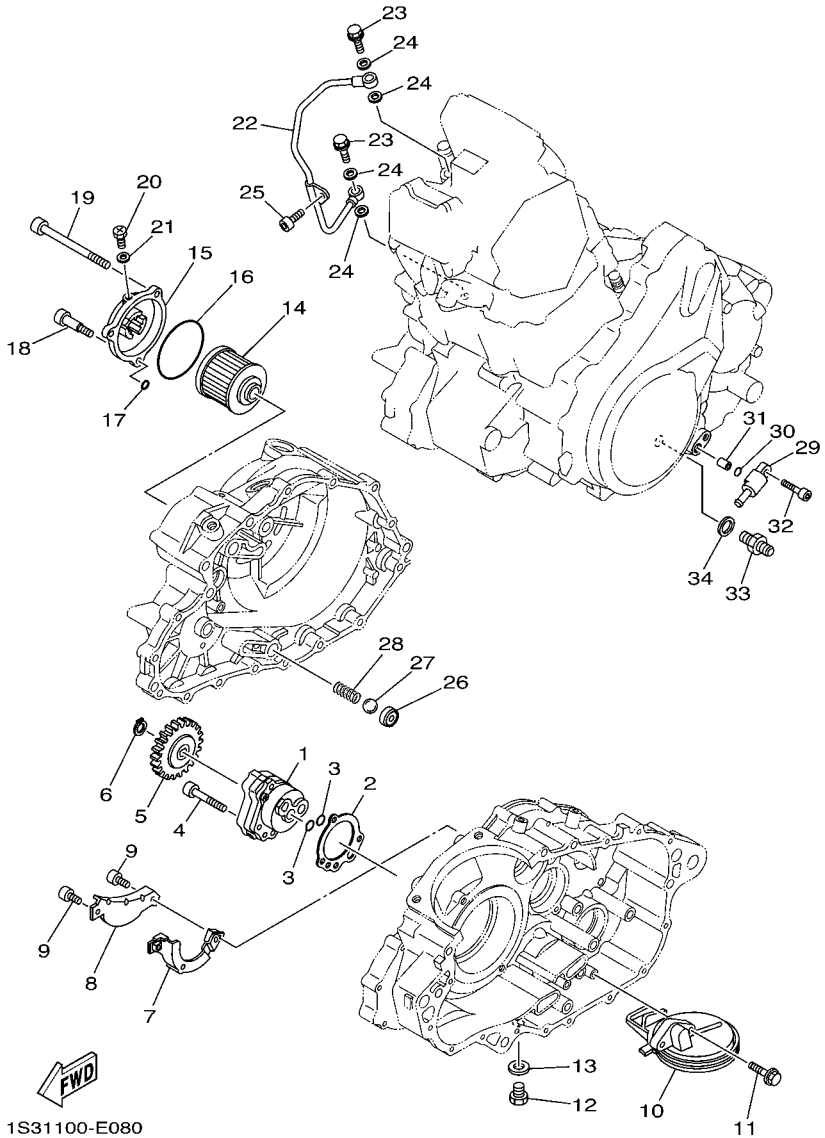

FIG. 8 OIL PUMP

REF. NO.	PART NO.	DESCRIPTION	USA	CAN	EUR	OCE		REMARKS
1	5LP–13300–00	OIL PUMP ASSY	1	1	1	1		
2	5LP–13329–00	GASKET, PUMP COVER	1	1	1	1		
3	93210–13361	O-RING	2	2	2	2		
4	91312–06035	BOLT	3	3	3	3		
5	3AJ–13325–00	GEAR, PUMP DRIVEN	1	1	1	1		
6	99009–11400	CIRCLIP	1	1	1	1		
7	1S3–13356–00	COVER, PUMP 2	1	1	1	1		
8	1S3–13327–00	COVER, PUMP GEAR	1	1	1	1		
9	90110–05030	BOLT, HEXAGON SOCKET HEAD	2	2	2	2		
10	1S3–13410–00	STRAINER HOUSING ASSY	1	1	1	1		
11	90105–06082	BOLT, FLANGE	2	2	2	2		
12	90340–14029	PLUG, STRAIGHT SCREW	1	1	1	1		
13	214–11198–01	GASKET	1	1	1	1		
14	4X7–13440–01	ELEMENT ASSY, OIL CLEANER	1	1	1	1		
15	1S3–13447–00	COVER, OIL ELEMENT	1	1	1	1		
16	93210–64297	O-RING	1	1	1	1		
17	93210–07135	O-RING	1	1	1	1		
18	90109–06169	BOLT	1	1	1	1		
19	91312–06095	BOLT	2	2	2	2		
20	90149–05018	SCREW	1	1	1	1		
21	90430–05126	GASKET	1	1	1	1		
22	1S3–13171–00	PIPE, DELIVERY 2	1	1	1	1		
23	90401–10024	BOLT, UNION	2	2	2	2		
24	90430–10188	GASKET	4	4	4	4		
25	91312–06012	BOLT	1	1	1	1		
26	583–13113–00	SEAT, CHECK BALL	1	1	1	1		
27	93503–08007	BALL	1	1	1	1		

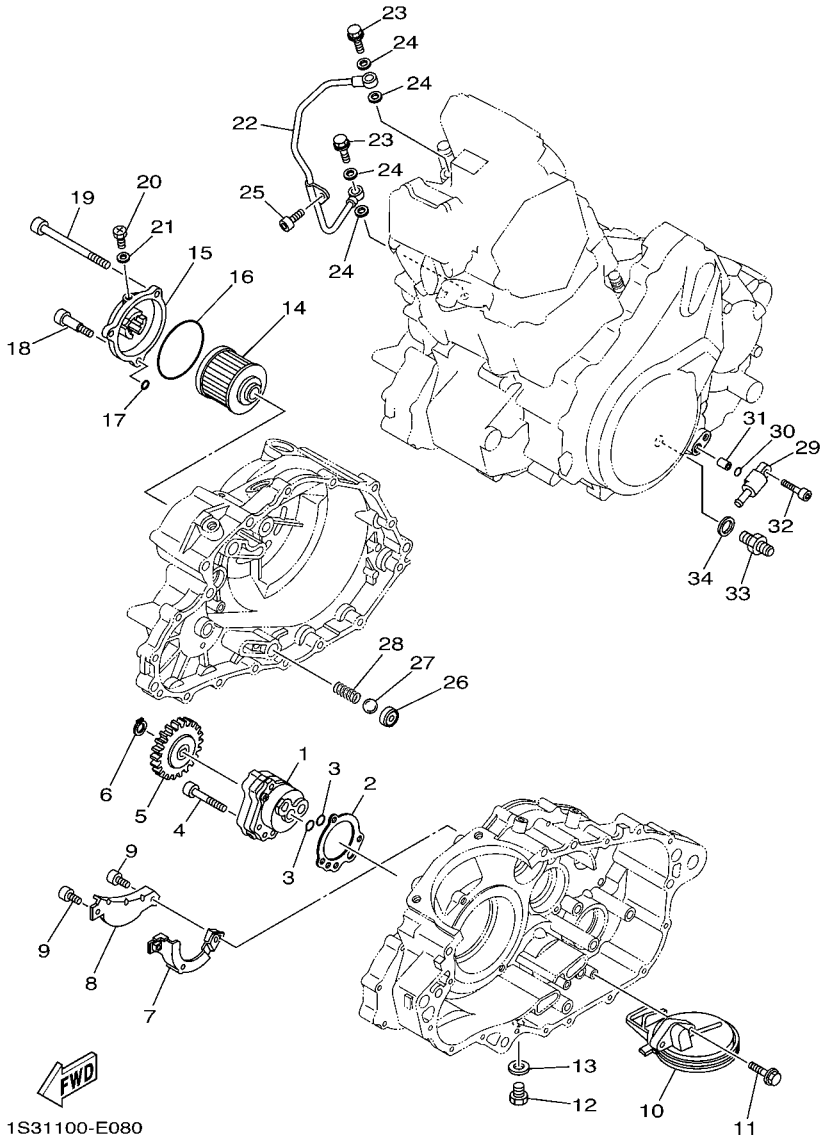

FIG. 8 OIL PUMP

REF. NO.	PART NO.	DESCRIPTION	USA	CAN	EUR	OCE		REMARKS
28	90501–043E0	SPRING, COMPRESSION	1	1	1	1		
29	1S3–13416–00	PIPE, OIL 1	1	1	1	1		
30	93210–10197	O-RING	1	1	1	1		
31	99530–10114	PIN, DOWEL	1	1	1	1		
32	95022–06025	BOLT, FLANGE	1	1	1	1		
33	1S3–13132–00	JOINT	1	1	1	1		
34	90430–14043	GASKET	1	1	1	1		

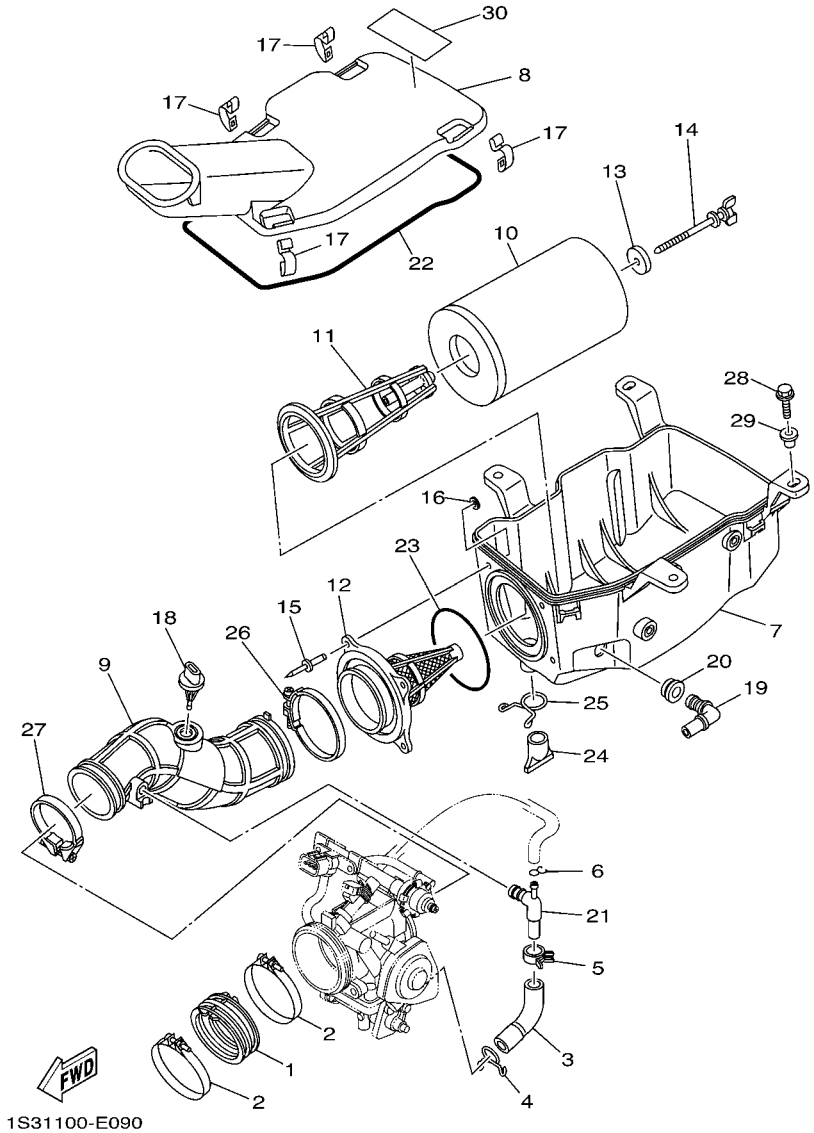

FIG. 9 INTAKE

REF. NO.	PART NO.	DESCRIPTION	USA	CAN	EUR	OCE		REMARKS
1	5VK–13586–00	JOINT, CARBURETOR 1	1	1	1	1		
2	90450–72003	HOSE CLAMP ASSY	2	2	2	2		
3	1S3–13545–00	HOSE 1	1	1	1	1		
4	90467–160A4	CLIP	1	1	1	1		
5	90467–15012	CLIP	1	1	1	1		
6	90467–09006	CLIP	1	1	1	1		
7	1S3–14411–00	CASE, AIR CLEANER 1	1	1	1	1		
8	1S3–14412–01	CAP, CLEANER CASE 1	1	1	1	1		
9	1S3–14453–00	JOINT, AIR CLEANER 1	1	1	1	1		
10	1S3–14451–00	ELEMENT, AIR CLEANER	1	1	1	1		
11	1S3–14458–00	GUIDE	1	1	1	1		
12	1S3–14459–01	HOLDER, GUIDE	1	1	1	1		
13	90209–06014	WASHER	1	1	1	1		
14	90122–06010	BOLT, WING	1	1	1	1		
15	90267–48138	RIVET, BLIND	4	4	4	4		
16	90201–04028	WASHER, PLATE	4	4	4	4		
17	5GH–14436–00	HOOK	4	4	4	4		
18	5VU–85886–00	SENSOR, AIR TEMPRATURE	1	1	1	1		
19	5KM–14419–00	PIPE	1	1	1	1		
20	31A–14435–00	GROMMET	1	1	1	1		
21	4BR–14419–00	PIPE	1	1	1	1		
22	10M–14457–00	SEAL	1	1	1	1		
23	1S3–14457–00	SEAL	1	1	1	1		
24	59V–14457–00	SEAL	1	1	1	1		
25	90467–220A1	CLIP	1	1	1	1		
26	90460–75020	CLAMP, HOSE	1	1	1	1		
27	90450–59006	HOSE CLAMP ASSY	1	1	1	1		

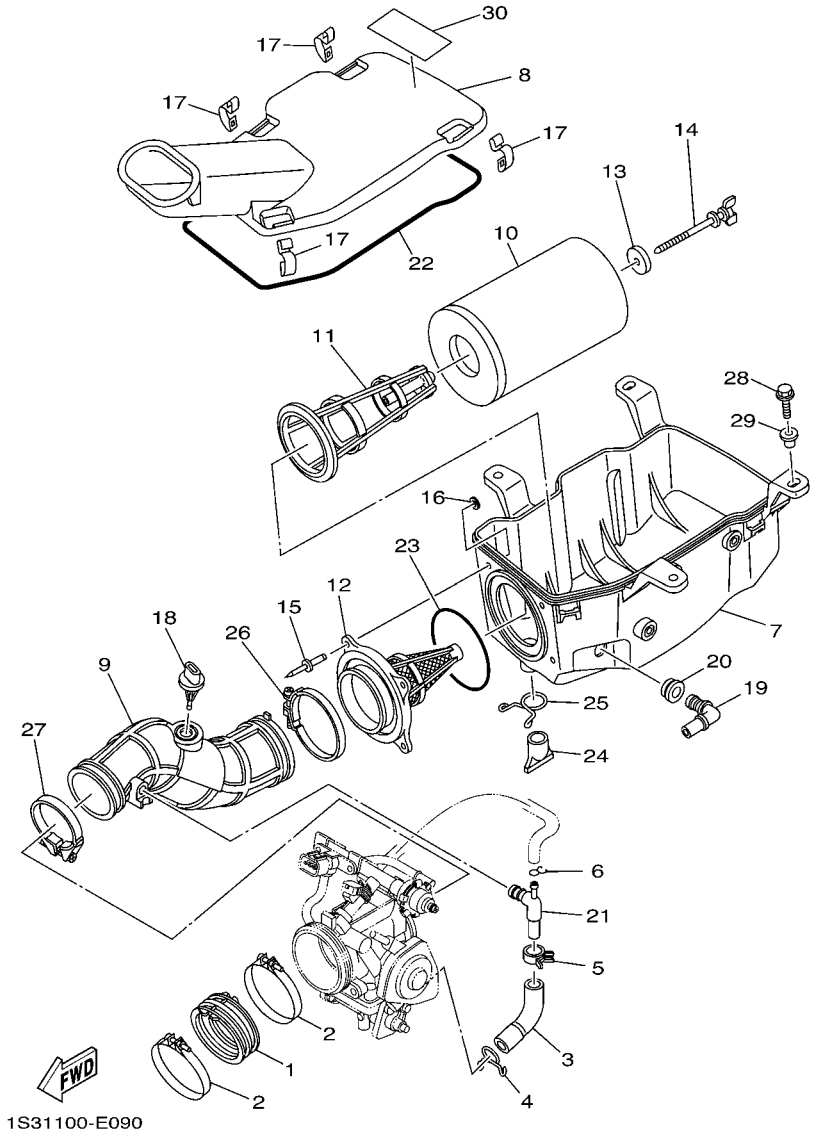

FIG. 9 INTAKE

REF. NO.	PART NO.	DESCRIPTION	USA	CAN	EUR	OCE		REMARKS
28	90105–06084	BOLT, FLANGE	4	4	4	4		
29	90387–08073	COLLAR	4	4	4	4		
30	1S3–2177C–10	PLATE, EPA OFFROAD ATV 1	1					

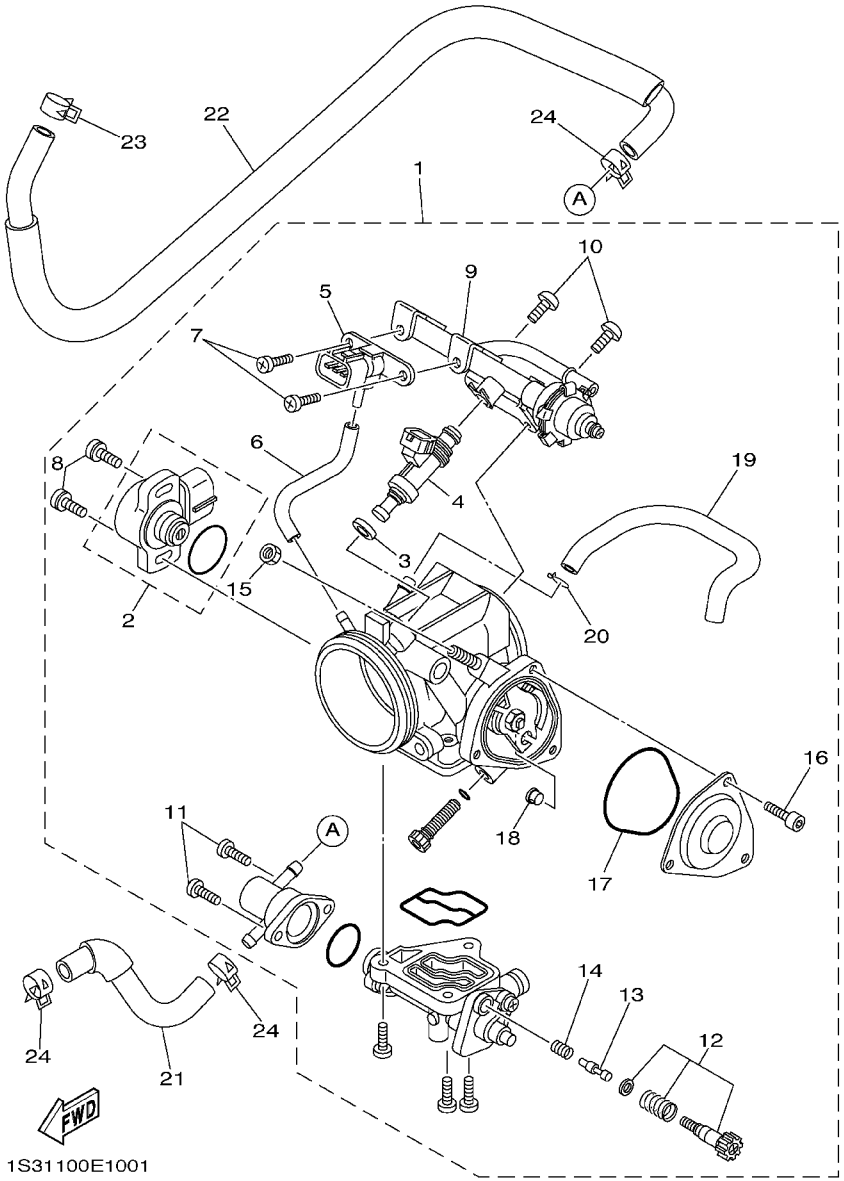

FIG. 10 THROTTLE BODY ASSY 1

REF. NO.	PART NO.	DESCRIPTION	USA	CAN	EUR	OCE		REMARKS
1	1S3–13750–00	THROTTLE BODY ASSY	1	1	1	1		
2	1S3–W8588–00	.THROTTLE SENSOR SET	1	1	1	1		
3	8FP–13556–00	.GASKET, MANIFOLD	1	1	1	1		
4	5VK–13761–00	.INJECTOR ASSY	1	1	1	1		
5	1C7–82380–00	.SENSOR, PRESSURE	1	1	1	1		
6	5JW–14348–00	.PIPE 1	1	1	1	1		
7	98507–06010	.SCREW, PAN HEAD	2	2	2	2		
8	8CC–14216–10	.SCREW	2	2	2	2		
9	1S3–13160–00	.DELIVERY PIPE ASSY 1	1	1	1	1		
10	98507–06012	.SCREW, PAN HEAD	2	2	2	2		
11	98507–05012	.SCREW, PAN HEAD	2	2	2	2		
12	5VX–14503–00	.ADJUST SCREW SET	1	1	1	1		
13	1S3–13493–00	.PLUNGER	1	1	1	1		
14	4BH–14134–00	.SPRING, AIR ADJUSTING	1	1	1	1		
15	1S3–14161–00	.NUT, CABLE ADJUSTING	1	1	1	1		
16	91312–04006	.BOLT	3	3	3	3		
17	4WV–14147–10	.O-RING	1	1	1	1		
18	1UY–14155–00	.GUIDE, CABLE	1	1	1	1		
19	1S3–13543–00	.HOSE, AIR	1	1	1	1		
20	90467–09006	.CLIP	1	1	1	1		
21	1S3–1243A–00	HOSE 1	1	1	1	1		
22	1S3–1243E–00	HOSE 2	1	1	1	1		
23	90467–11090	CLIP	1	1	1	1		
24	90467–11090	CLIP	3	3	3	3		

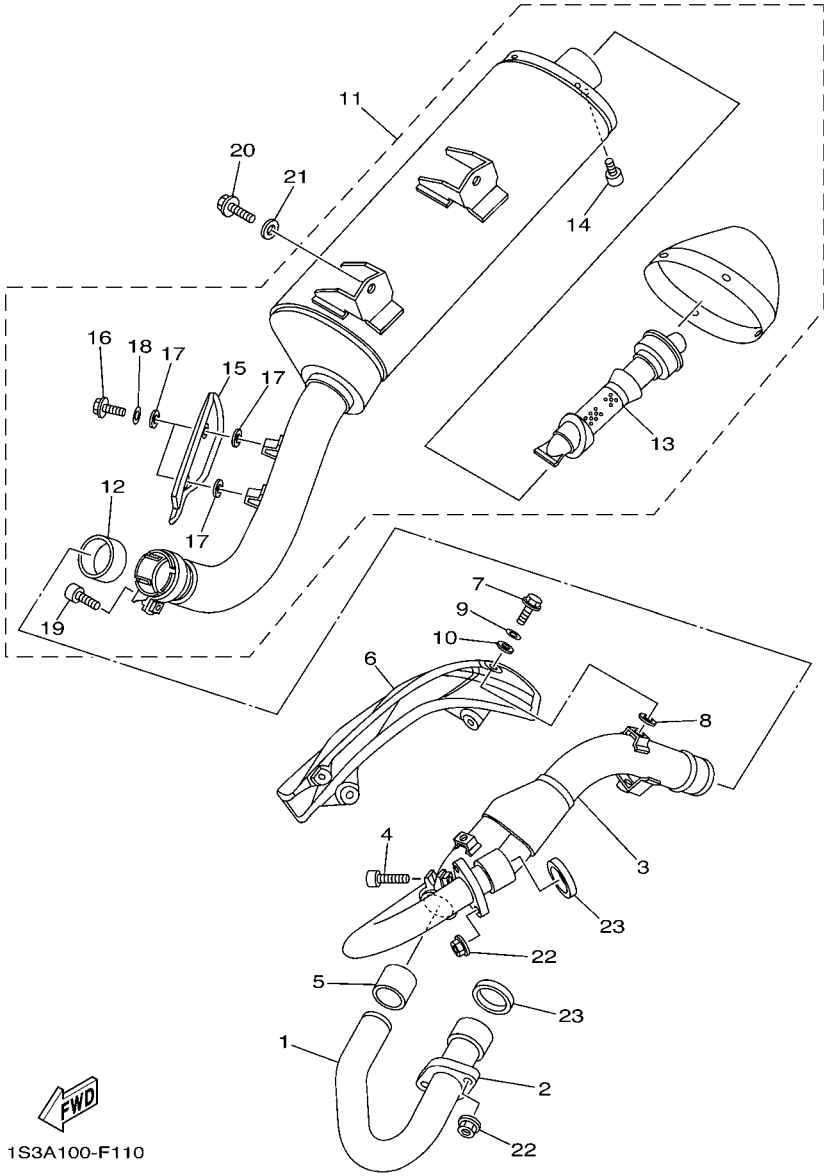

FIG. 11 EXHAUST

REF. NO.	PART NO.	DESCRIPTION	USA	CAN	EUR	OCE		REMARKS
1	1S3–14611–00	PIPE, EXHAUST 1	1	1	1	1		
2	1S3–14612–00	NUT, RING	1	1	1	1		
3	1S3–14621–01	PIPE, EXHAUST 2	1	1	1	1		
4	91314–08035	BOLT	1	1	1	1		
5	3YF–14714–00	GASKET, MUFFLER	1	1	1	1		
6	1S3–14628–00	PROTECTOR, EXHAUST PIPE	1	1	1	1		
7	95022–06012	BOLT, FLANGE	4	4	4	4		
8	90201–05015	WASHER, PLATE	4	4	4	4		
9	90201–06035	WASHER, PLATE	4	4	4	4		
10	90201–05019	WASHER, PLATE	4	4	4	4		
11	1S3–14710–10	MUFFLER ASSY 1	1	1	1	1		
12	5LP–14714–00	.GASKET, MUFFLER	1	1	1	1		
13	1S3–14752–00	.PIPE, OUTLET	1	1	1	1		
14	91312–06010	.BOLT	1	1	1	1		
15	1S3–14728–00	.PROTECTOR, MUFFLER 2	1	1	1	1		
16	98902–06010	.SCREW, BIND	2	2	2	2		
17	90201–05015	.WASHER, PLATE	4	4	4	4		
18	92902–06200	.WASHER	2	2	2	2		
19	91314–08035	.BOLT	1	1	1	1		
20	90105–08142	BOLT, FLANGE	2	2	2	2		
21	90201–08048	WASHER, PLATE	2	2	2	2		
22	95702–08500	NUT, FLANGE	4	4	4	4		
23	3YF–14613–01	GASKET, EXHAUST PIPE	2	2	2	2		

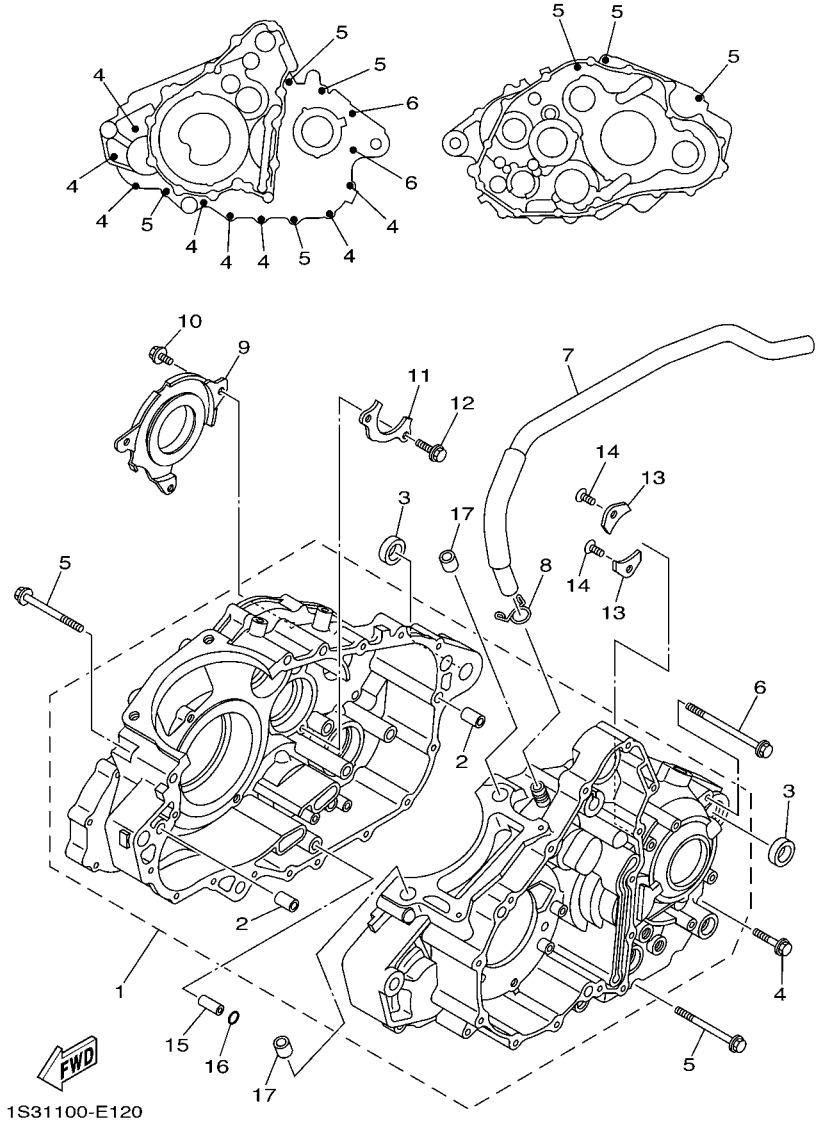

FIG. 12 CRANKCASE

REF. NO.	PART NO.	DESCRIPTION	USA	CAN	EUR	OCE		REMARKS
1	1S3–15100–01	CRANKCASE ASSY	1	1	1	1		
2	99530–10114	.PIN, DOWEL	2	2	2	2		
3	90387–17009	COLLAR	2	2	2	2		
4	95022–06030	BOLT, FLANGE	8	8	8	8		
5	95022–06070	BOLT, FLANGE	7	7	7	7		
6	95022–06090	BOLT, FLANGE	2	2	2	2		
7	1S3–11166–00	PIPE, BREATHER 1	1	1	1	1		
8	90467–140A4	CLIP	1	1	1	1		
9	1S3–11165–00	PLATE, BREATHER	1	1	1	1		
10	90105–06081	BOLT, FLANGE	3	3	3	3		
11	1S3–15383–00	PLATE, BEARING COVER	1	1	1	1		
12	90105–06082	BOLT, FLANGE	2	2	2	2		
13	4JT–15381–01	PLATE, BEARING COVER	2	2	2	2		
14	90149–06074	SCREW	2	2	2	2		
15	99530–08016	PIN, DOWEL	1	1	1	1		
16	93210–07135	O-RING	1	1	1	1		
17	99530–14016	PIN, DOWEL	2	2	2	2		

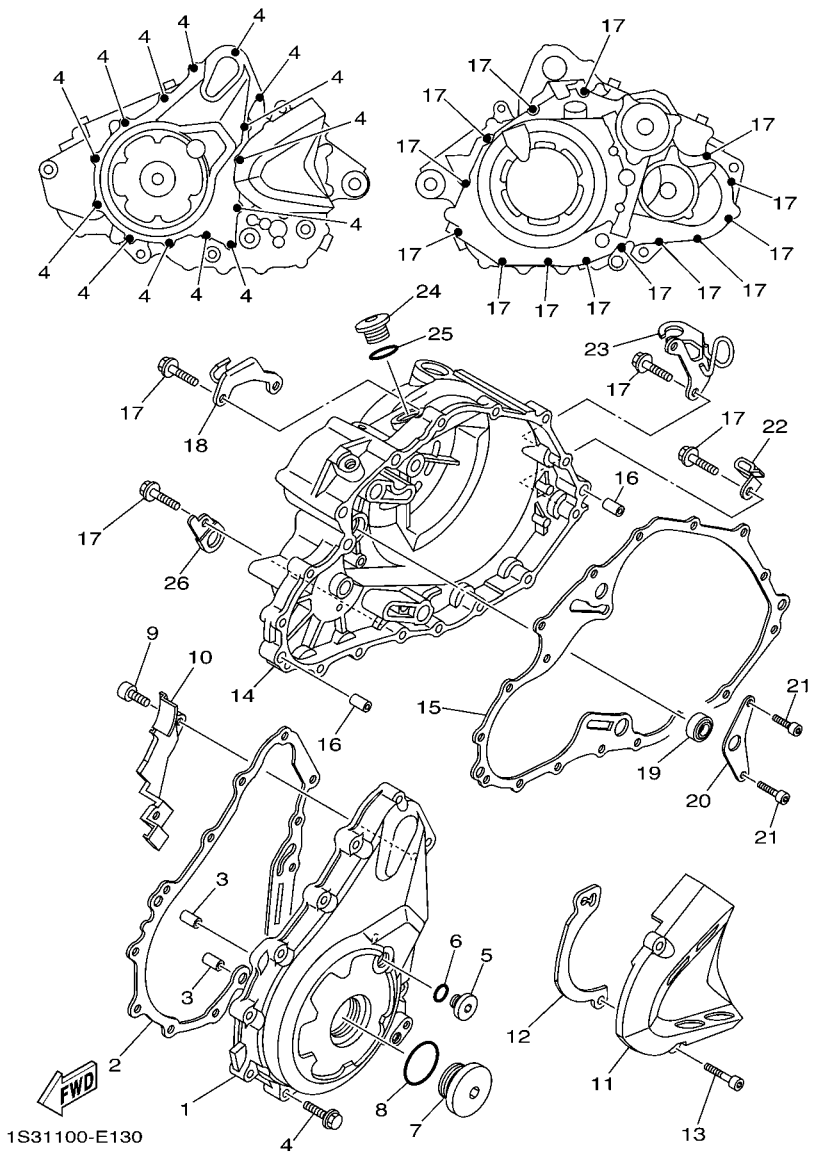

FIG. 13 CRANKCASE COVER 1

REF. NO.	PART NO.	DESCRIPTION	USA	CAN	EUR	OCE		REMARKS
1	1S3–15411–00	COVER, CRANKCASE 1	1	1	1	1		
2	1S3–15451–00	GASKET, CRANKCASE COVER 1	1	1	1	1		
3	99530–10114	PIN, DOWEL	2	2	2	2		
4	95022–06030	BOLT, FLANGE	14	14	14	14		
5	90340–14003	PLUG, STRAIGHT SCREW	1	1	1	1		
6	93210–14369	O-RING	1	1	1	1		
7	90340–36001	PLUG, STRAIGHT SCREW	1	1	1	1		
8	93210–357A3	O-RING	1	1	1	1		
9	90110–05031	BOLT, HEXAGON SOCKET HEAD	1	1	1	1		
10	1S3–15113–00	PLATE	1	1	1	1		
11	1S3–15421–00	COVER, CRANKCASE 2	1	1	1	1		
12	1S3–17466–00	GUIDE, CHAIN	1	1	1	1		
13	91312–06025	BOLT	2	2	2	2		
14	1S3–15431–00	COVER, CRANKCASE 3	1	1	1	1		
15	1S3–15462–00	GASKET, CRANKCASE COVER 3	1	1	1	1		
16	99530–10120	PIN, DOWEL	2	2	2	2		
17	95022–06030	BOLT, FLANGE	14	14	14	14		
18	1S3–15441–00	HOLDER, CLUTCH CABLE	1	1	1	1		
19	93101–14164	OIL SEAL	1	1	1	1		
20	1S3–15118–00	HOLDER	1	1	1	1		
21	90110–06182	BOLT, HEXAGON SOCKET HEAD	2	2	2	2		
22	90461–10011	CLAMP	1	1	1	1		
23	1S3–1546C–00	HOLDER	1	1	1	1		
24	1S3–15189–00	PLUG	1	1	1	1		
25	93210–207A0	O-RING	1	1	1	1		
26	90462–08046	CLAMP	1	1	1	1		

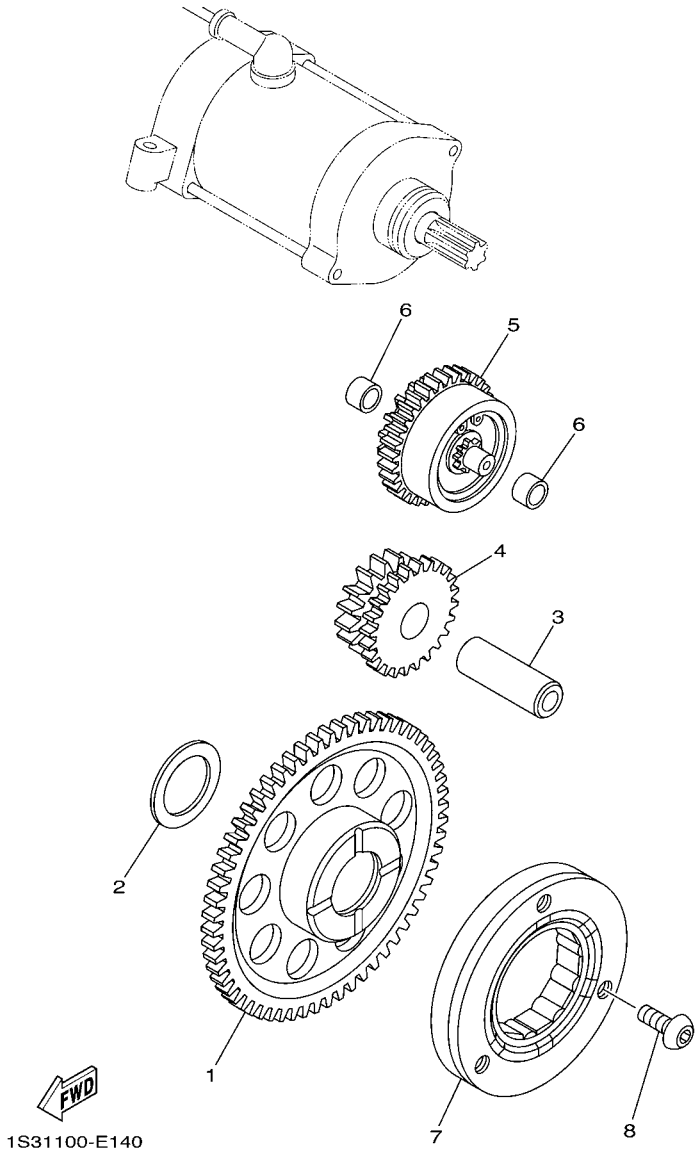

FIG. 14 STARTER

REF. NO.	PART NO.	DESCRIPTION	USA	CAN	EUR	OCE		REMARKS
1	1S3–15515–00	GEAR 3	1	1	1	1		
2	90201–286K9	WASHER, PLATE	1	1	1	1		
3	1VJ–15522–00	SHAFT 2	1	1	1	1		
4	1S3–15517–00	GEAR, IDLER 2	1	1	1	1		
5	1S3–15560–00	DAMPER ASSY	1	1	1	1		
6	90380–10002	BUSH, SOLID	2	2	2	2		
7	5VK–15590–00	STARTER ONE-WAY ASSY	1	1	1	1		
8	90149–08018	SCREW	3	3	3	3		

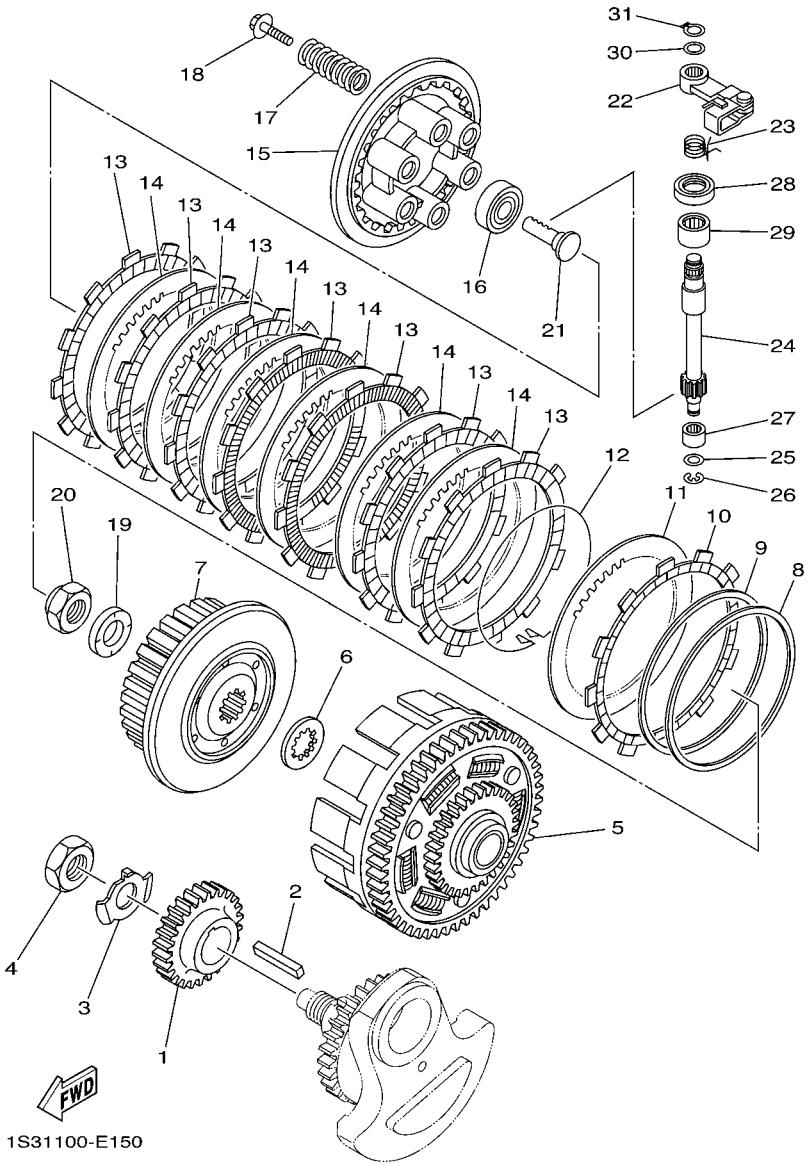

FIG. 15 CLUTCH

REF. NO.	PART NO.	DESCRIPTION	USA	CAN	EUR	OCE		REMARKS
1	1S3–16111–00	GEAR, PRIMARY DRIVE	1	1	1	1		
2	90282–07003	KEY, STRAIGHT	1	1	1	1		
3	90215–20006	WASHER, LOCK	1	1	1	1		
4	90170–20274	NUT	1	1	1	1		
5	1S3–16150–00	PRIMARY DRIVEN GEAR COMP.	1	1	1	1		
6	2JN–16154–00	PLATE, THRUST 1	1	1	1	1		
7	1S3–16371–00	BOSS, CLUTCH	1	1	1	1		
8	5JG–16384–00	PLATE, SEAT	1	1	1	1		
9	5JG–16383–00	SPRING, CLUTCH BOSS	1	1	1	1		
10	5TG–16331–00	PLATE, FRICTION 2	1	1	1	1		
11	4X7–16325–00	PLATE, CLUTCH 2	1	1	1	1		
12	4X7–16385–00	RING, CLUTCH BOSS	1	1	1	1		
13	5TA–16321–00	PLATE, FRICTION	7	7	7	7		
14	4X7–16325–00	PLATE, CLUTCH 2	6	6	6	6		
15	1S3–16351–00	PLATE, PRESSURE 1	1	1	1	1		
16	93306–00304	BEARING	1	1	1	1		
17	90501–230E4	SPRING, COMPRESSION	6	6	6	6		
18	90159–06029	SCREW, WITH WASHER	6	6	6	6		
19	90208–20001	WASHER, CONICAL SPRING	1	1	1	1		
20	90179–20007	NUT	1	1	1	1		
21	4XV–16356–01	ROD, PUSH 1	1	1	1	1		
22	3LD–16340–01	PUSH LEVER ASSY	1	1	1	1		
23	90508–18018	SPRING, TORSION	1	1	1	1		
24	5EB–16382–00	AXLE, PUSH LEVER	1	1	1	1		
25	92902–08600	WASHER, PLATE	1	1	1	1		
26	99001–07600	CIRCLIP	1	1	1	1		
27	93317–11020	BEARING	1	1	1	1		

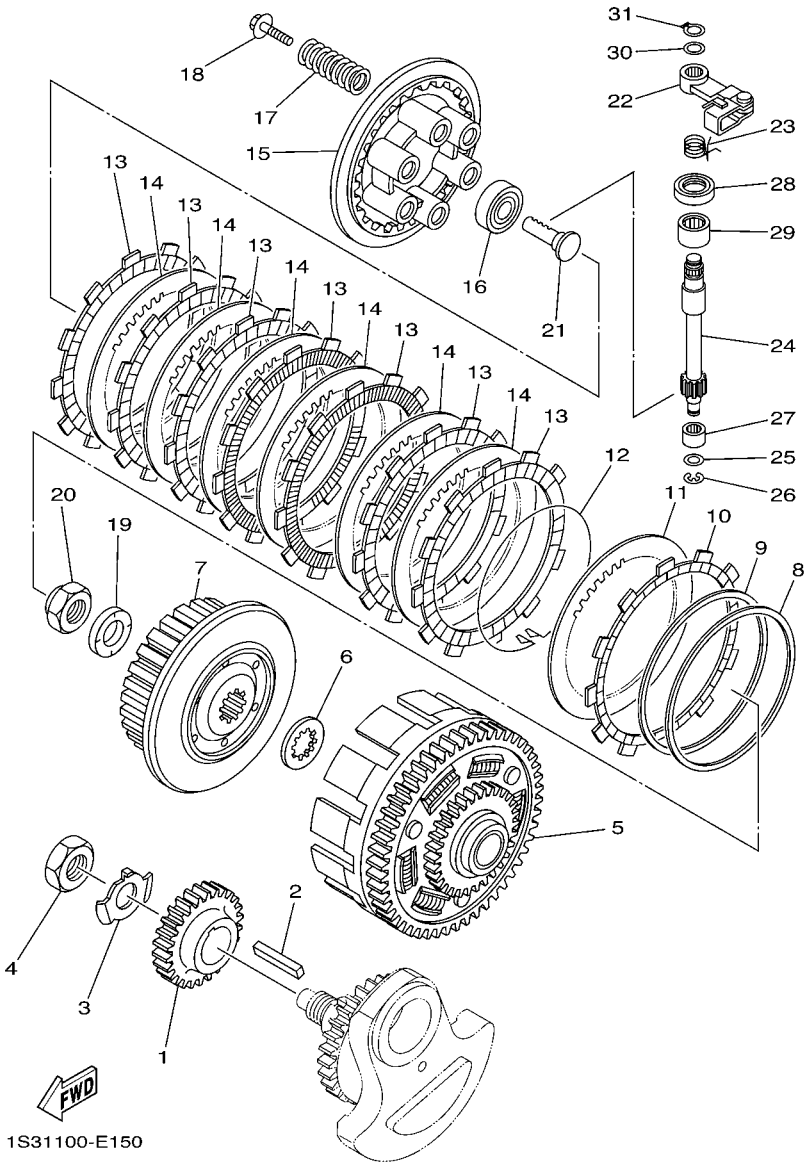

FIG. 15 CLUTCH

REF. NO.	PART NO.	DESCRIPTION	USA	CAN	EUR	OCE		REMARKS
28	93102–15212	OIL SEAL	1	1	1	1		
29	93315–31502	BEARING	1	1	1	1		
30	90201–10614	WASHER, PLATE	1	1	1	1		
31	99009–10400	CIRCLIP	1	1	1	1		

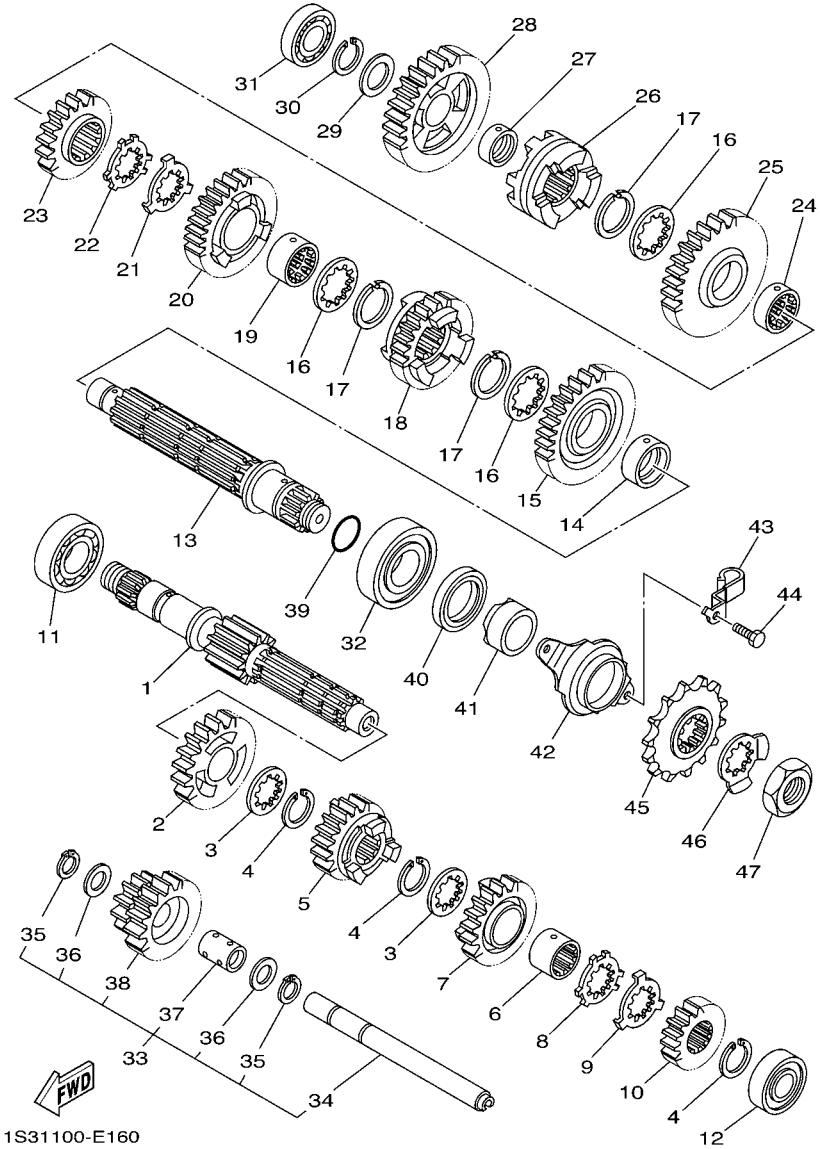

FIG. 16 TRANSMISSION

REF. NO.	PART NO.	DESCRIPTION	USA	CAN	EUR	OCE		REMARKS
1	1S3–17401–00	MAIN AXLE ASSY	1	1	1	1		
2	1S3–17151–00	GEAR, 5TH PINION (24T)	1	1	1	1		
3	90209–22008	WASHER	2	2	2	2		
4	93440–25084	CIRCLIP	3	3	3	3		
5	1S3–17131–00	GEAR, 3RD PNION (17T)	1	1	1	1		
6	90387–22006	COLLAR	1	1	1	1		
7	1S3–17141–00	GEAR, 4TH PINION (22T)	1	1	1	1		
8	90214–22003	WASHER, CLAW	1	1	1	1		
9	90214–22002	WASHER, CLAW	1	1	1	1		
10	1S3–17121–00	GEAR, 2ND PINION (14T)	1	1	1	1		
11	93306–20501	BEARING	1	1	1	1		
12	93306–00431	BEARING	1	1	1	1		
13	1S3–17402–00	DRIVE AXLE ASSY	1	1	1	1		
14	90387–28008	COLLAR	1	1	1	1		
15	1S3–17221–00	GEAR, 2ND WHEEL (28T)	1	1	1	1		
16	90209–26008	WASHER	3	3	3	3		
17	93440–28062	CIRCLIP	3	3	3	3		
18	1S3–17241–00	GEAR, 4TH WHEEL (25T)	1	1	1	1		
19	90387–26005	COLLAR	1	1	1	1		
20	1S3–17231–00	GEAR, 3RD WHEEL (25T)	1	1	1	1		
21	90214–26002	WASHER, CLAW	1	1	1	1		
22	90214–26003	WASHER, CLAW	1	1	1	1		
23	1S3–17251–00	GEAR, 5TH WHEEL (22T)	1	1	1	1		
24	90387–26004	COLLAR	1	1	1	1		
25	1S3–17211–00	GEAR, 1ST WHEEL (38T)	1	1	1	1		
26	1S3–17285–00	CLUTCH, DOG	1	1	1	1		
27	90387–20021	COLLAR	1	1	1	1		

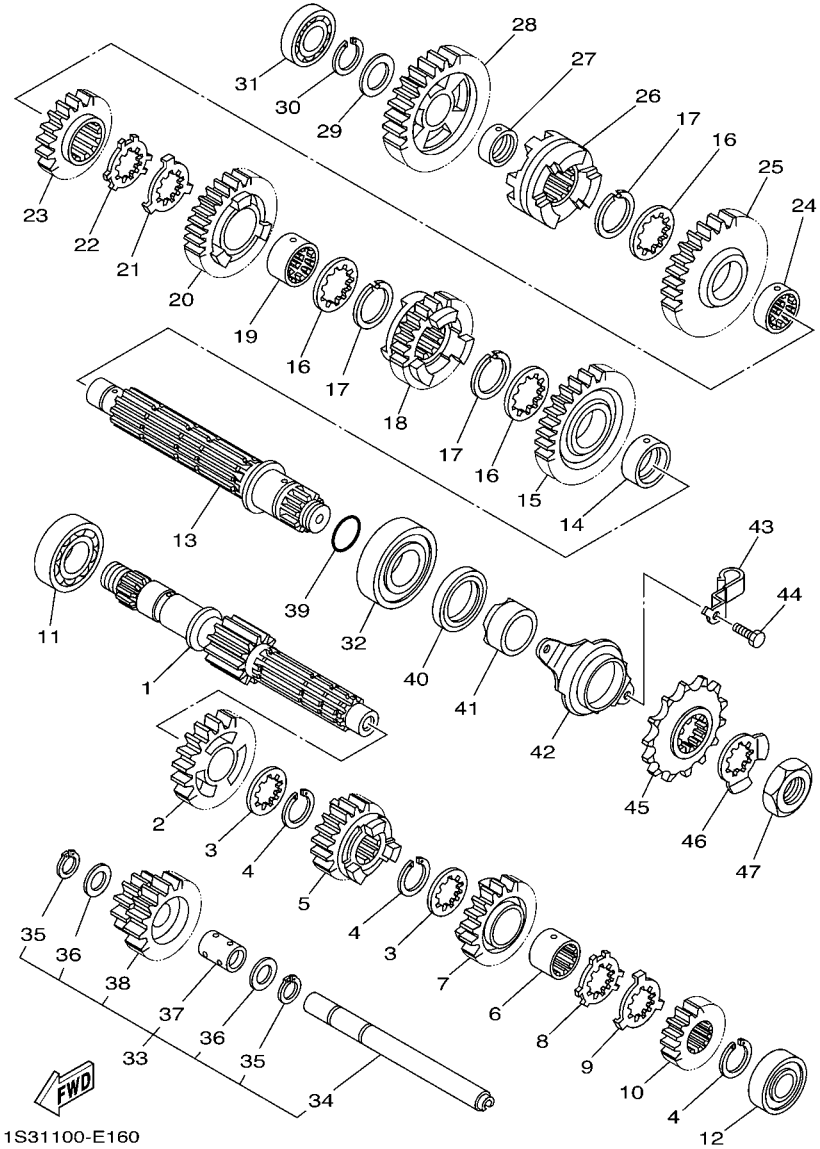

FIG. 16 TRANSMISSION

REF. NO.	PART NO.	DESCRIPTION	USA	CAN	EUR	OCE		REMARKS
28	1S3–17253–00	GEAR, REVERSE WHEEL 2 (29T)	1	1	1	1		
29	90201–20276	WASHER, PLATE (T=1.0)	1	1	1	1		
30	99009–20400	CIRCLIP	1	1	1	1		
31	93306–00415	BEARING	1	1	1	1		
32	93306–27803	BEARING	1	1	1	1		
33	1S3–17430–00	COUNTER AXLE ASSY	1	1	1	1		
34	1S3–17432–00	.AXLE, IDLE	1	1	1	1		
35	93440–15012	.CIRCLIP	2	2	2	2		
36	90201–152P4	.WASHER, PLATE	2	2	2	2		
37	90387–1504G	.COLLAR	1	1	1	1		
38	1S3–17243–00	.GEAR, REVERSE WHEEL1(12T/24T)	1	1	1	1		
39	93210–25755	O-RING	1	1	1	1		
40	93102–35393	OIL SEAL	1	1	1	1		
41	90387–28009	COLLAR	1	1	1	1		
42	1S3–17471–00	PLATE, COVER	1	1	1	1		
43	90461–10011	CLAMP	1	1	1	1		
44	97022–06014	BOLT	2	2	2	2		
45	9383G–14231	SPROCKET, DRIVE (14T)	1	1	1	1		
46	90215–25003	WASHER, LOCK	1	1	1	1		
47	90179–22003	NUT	1	1	1	1		

FIG. 17 SHIFT CAM & FORK

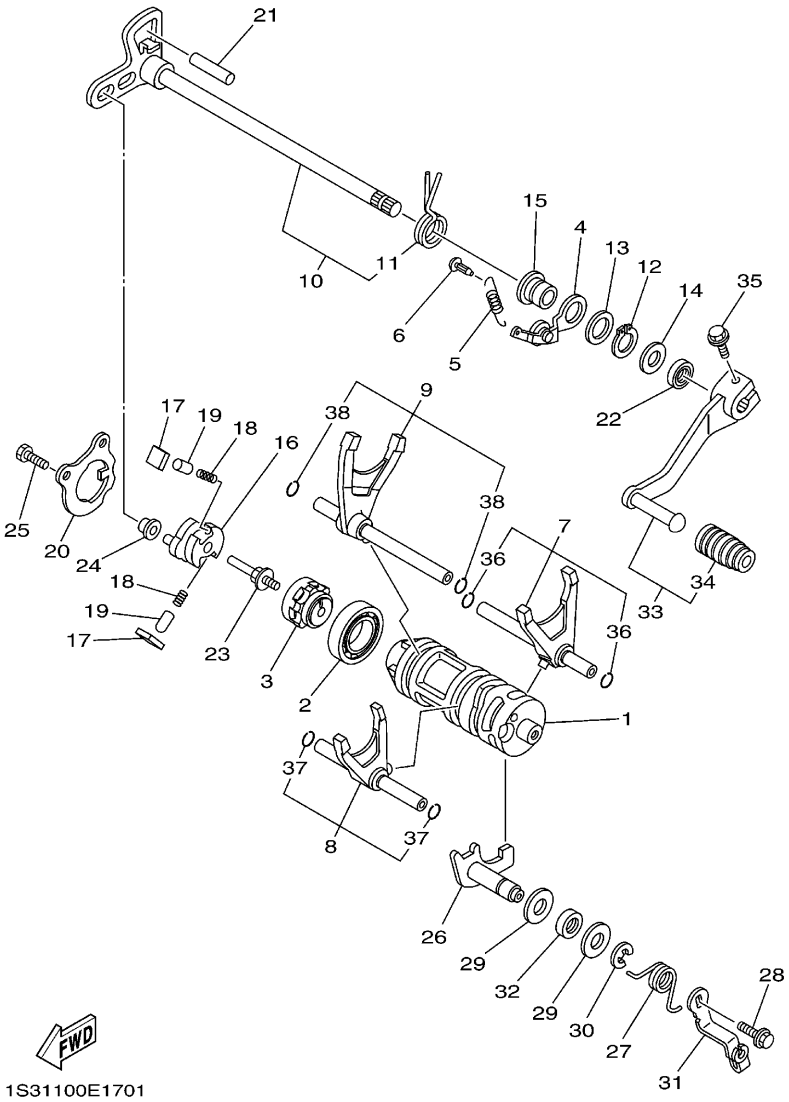

REF. NO.	PART NO.	DESCRIPTION	USA	CAN	EUR	OCE		REMARKS
1	1S3–18541–00	CAM, SHIFT	1	1	1	1		
2	93306–90509	BEARING	1	1	1	1		
3	4EW–18185–00	SEGMENT	1	1	1	1		
4	1S3–18140–00	STOPPER LEVER ASSY	1	1	1	1		
5	5JW–18144–00	HANGER, SPRING	1	1	1	1		
6	132–16346–00	HOOK, SPRING	1	1	1	1		
7	1S3–18501–00	FORK, SHIFT 1	1	1	1	1		
8	1S3–18502–00	FORK, SHIFT 2	1	1	1	1		
9	1S3–18503–00	FORK, SHIFT 3	1	1	1	1		
10	1S3–18101–00	SHIFT SHAFT ASSY	1	1	1	1		
11	90508–35007	.SPRING, TORSION	1	1	1	1		
12	99009–17400	CIRCLIP	1	1	1	1		
13	90201–177G4	WASHER, PLATE	1	1	1	1		
14	90201–12040	WASHER, PLATE	1	1	1	1		
15	5VK–18699–00	BOSS 1	1	1	1	1		
16	1S3–18122–00	LEVER, SHIFT 2	1	1	1	1		
17	3XJ–18182–00	PAWL, SHIFTER	2	2	2	2		
18	90501–052G5	SPRING, COMPRESSION	2	2	2	2		
19	3XJ–18184–00	PIN, PAWL	2	2	2	2		
20	1S3–18172–00	GUIDE, SHIFT	1	1	1	1		
21	93608–30002	PIN, DOWEL	1	1	1	1		
22	93102–12224	OIL SEAL	1	1	1	1		
23	3XJ–18173–10	PIN, SHIFT	1	1	1	1		
24	3XJ–18178–00	ROLLER, SHIFT LEVER	1	1	1	1		
25	90101–06664	BOLT	2	2	2	2		
26	1S3–18380–00	SHIFTER BRKT. ASSY	1	1	1	1		
27	5LP–18337–01	SPRING	1	1	1	1		

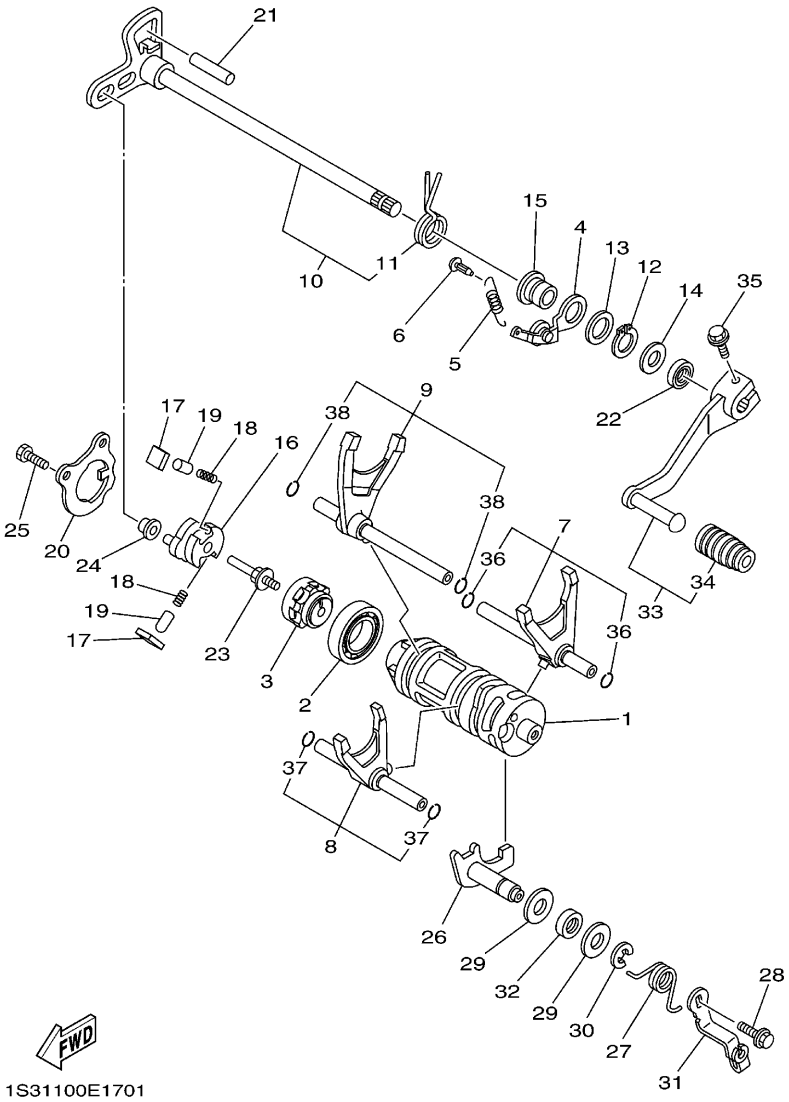

FIG. 17 SHIFT CAM & FORK

REF. NO.	PART NO.	DESCRIPTION	USA	CAN	EUR	OCE		REMARKS
28	95812–06012	BOLT, FLANGE	1	1	1	1		
29	90201–12575	WASHER, PLATE	2	2	2	2		
30	99001–10600	CIRCLIP	1	1	1	1		
31	5LP–18431–00	BRACKET, SHIFTER	1	1	1	1		
32	93102–12106	OIL SEAL (SD 12-22-5 HS)	1	1	1	1		
33	1S3–18110–10	SHIFT PEDAL ASSY	1	1	1	1		
34	5YT–18113–00	.COVER, SHIFT PEDAL	1	1	1	1		
35	90105–06142	BOLT, FLANGE	1	1	1	1		
36	93440–09141	.CIRCLIP	2	2	2	2		
37	93440–09141	.CIRCLIP	2	2	2	2		
38	93440–09141	.CIRCLIP	2	2	2	2		

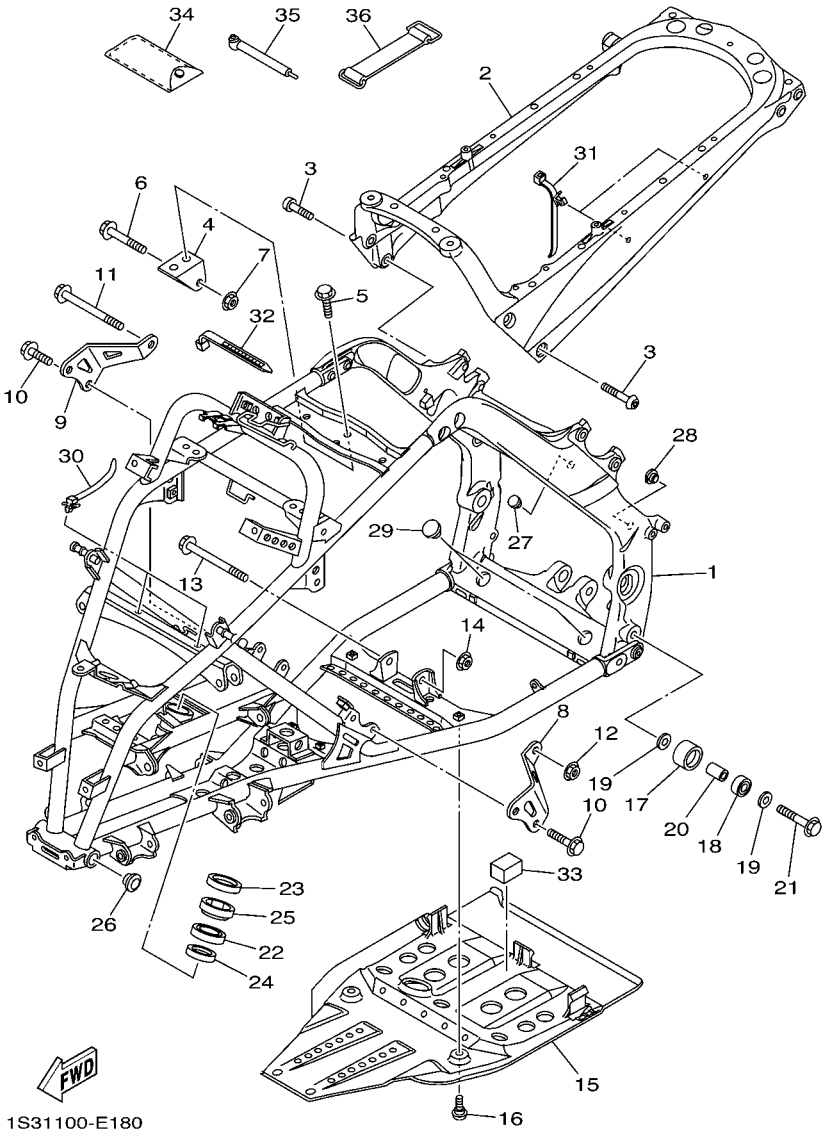

FIG. 18 FRAME

REF. NO.	PART NO.	DESCRIPTION	USA	CAN	EUR	OCE		REMARKS
1	1S3–21101–28	FRONT FRAME COMP.	1	1	1	1		
2	1S3–21190–29	REAR FRAME COMP.	1	1	1	1		
3	90149–10034	SCREW	4	4	4	4		
4	1S3–21315–00	STAY, ENGINE 2	1	1	1	1		
5	95817–08014	BOLT, FLANGE	2	2	2	2		
6	95817–10055	BOLT, FLANGE	1	1	1	1		
7	95607–10200	NUT, U FLANGE	1	1	1	1		
8	1S3–21316–00	STAY, ENGINE 3	1	1	1	1		
9	1S3–21317–00	STAY, ENGINE 3	1	1	1	1		
10	90105–08074	BOLT, FLANGE	4	4	4	4		
11	95812–10110	BOLT, FLANGE	1	1	1	1		
12	90185–10011	NUT, SELF-LOCKING	1	1	1	1		
13	95812–10090	BOLT, FLANGE	1	1	1	1		
14	90185–10011	NUT, SELF-LOCKING	1	1	1	1		
15	1S3–21471–00	PROTECTOR, ENGINE	1	1	1	1		
16	90109–06198	BOLT	4	4	4	4		
17	5TG–22178–00	TENSIONER	1	1	1	1		
18	93300–60804	BEARING	1	1	1	1		
19	90201–08043	WASHER, PLATE	2	2	2	2		
20	90387–08064	COLLAR	1	1	1	1		
21	95812–08045	BOLT, FLANGE	1	1	1	1		
22	93306–20352	BEARING	1	1	1	1		
23	93102–25081	OIL SEAL	1	1	1	1		
24	93102–25099	OIL SEAL	1	1	1	1		
25	5GT–23872–00	HOLDER, BEARING	1	1	1	1		
26	90338–26004	PLUG	2	2	2	2		
27	90338–24260	PLUG	2	2	2	2		

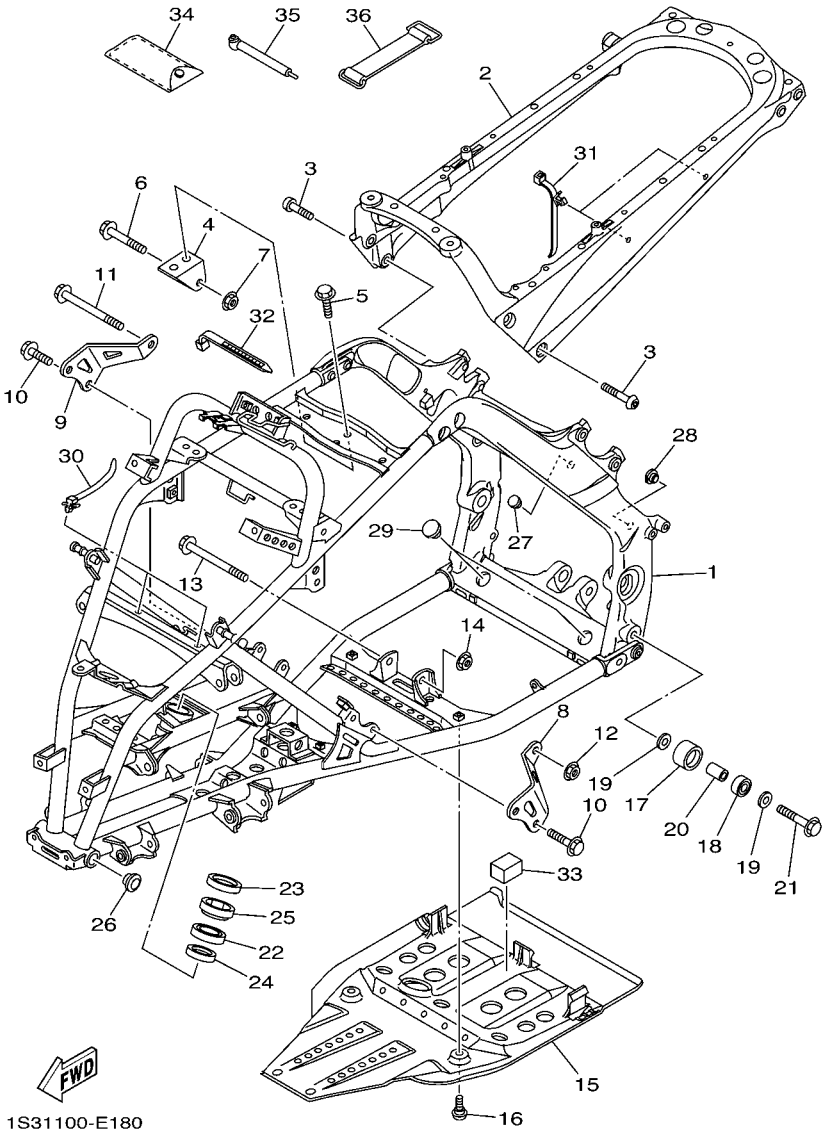

FIG. 18 FRAME

REF. NO.	PART NO.	DESCRIPTION	USA	CAN	EUR	OCE		REMARKS
28	90338–20183	PLUG	2	2	2	2		
29	90338–23004	PLUG	2	2	2	2		
30	90464–12036	CLAMP	2	2	2	2		
31	90464–20213	CLAMP	3	3	3	3		
32	90464–12045	CLAMP	1	1	1	1		
33	1S3–2140A–00	DAMPER, STOPPER	1	1	1	1		
34	5TG–28100–10	TOOL KIT	1	1	1	1		
35	1NV–2811A–01	GAUGE, AIR	1	1	1	1		
36	116–82131–00	BAND, BATTERY	1	1	1	1		

FIG. 19 FRONT FENDER

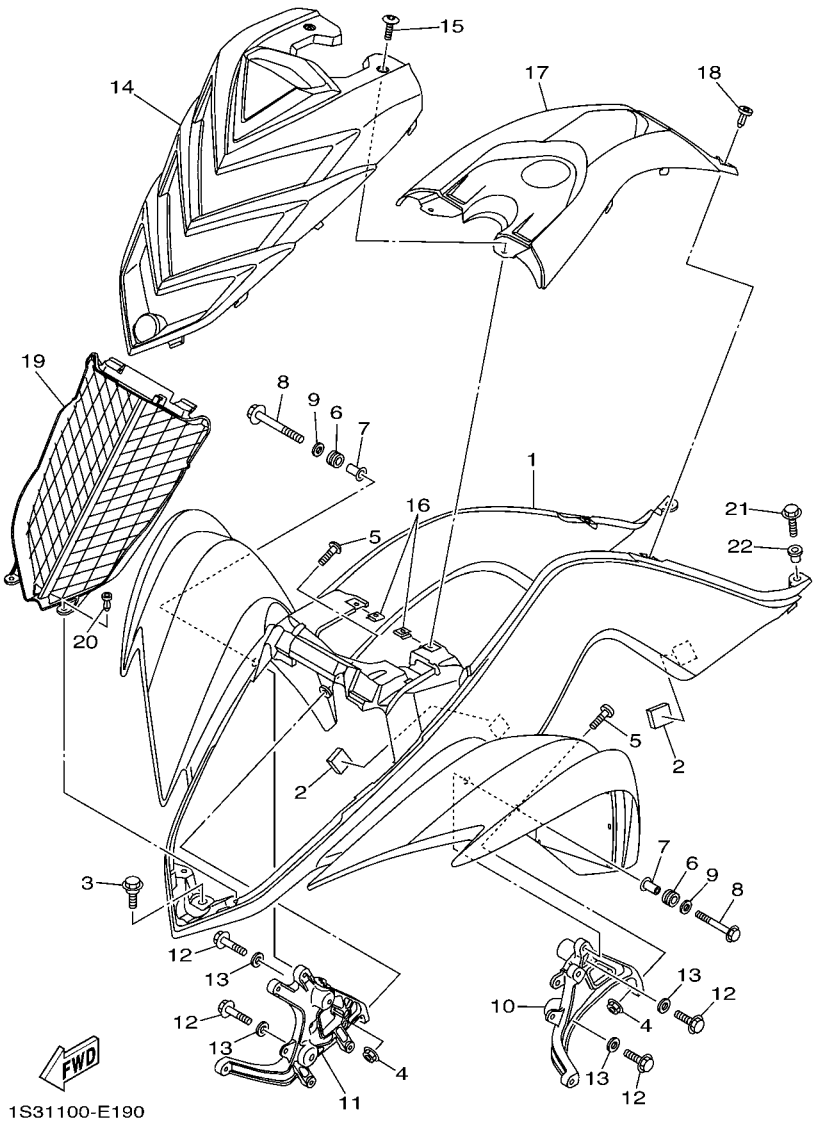

REF. NO.	PART NO.	DESCRIPTION	USA	CAN	EUR	OCE		REMARKS
1	1S3–W2151–10	FRONT FENDER COMP.	1					
	1S3–W215C–10	FRONT FENDER COMP.2		1				
	1S3–W215B–10	FRONT FENDER COMP. 2			1			
	1S3–W215E–10	FRONT FENDER COMP.				1		
2	1S3–21541–00	DAMPER 1	4	4	4	4		
3	90109–06172	BOLT	1	1	1	1		
4	95602–06200	NUT, SELF-LOCKING	2	2	2	2		
5	90110–06202	BOLT, HEXAGON SOCKET HEAD	2	2	2	2		
6	90480–14102	GROMMET	2	2	2	2		
7	90387–06136	COLLAR	2	2	2	2		
8	95812–06030	BOLT, FLANGE	2	2	2	2		
9	90201–06078	WASHER, PLATE	2	2	2	2		
10	1S3–21513–00	STAY, FENDER 1	1	1	1	1		
11	1S3–21514–00	STAY, FENDER 2	1	1	1	1		
12	95812–06014	BOLT, FLANGE	4	4	4	4		
13	90201–06089	WASHER, PLATE	4	4	4	4		
14	1S3–21556–D0	FENDER, FRONT 2	1	1	1	1		
15	90149–05299	SCREW	2	2	2	2		
16	90183–05008	NUT, SPRING	2	2	2	2		
17	1S3–2171A–B0	COVER, TOP	1	1	1	1		
18	90269–06002	RIVET	2	2	2	2		
19	1S3–12467–00	COVER, RADIATOR	1	1	1	1		
20	90269–06002	RIVET	2	2	2	2		
21	90105–06084	BOLT, FLANGE	2	2	2	2		
22	90387–06146	COLLAR	2	2	2	2		

FIG. 20 REAR FENDER

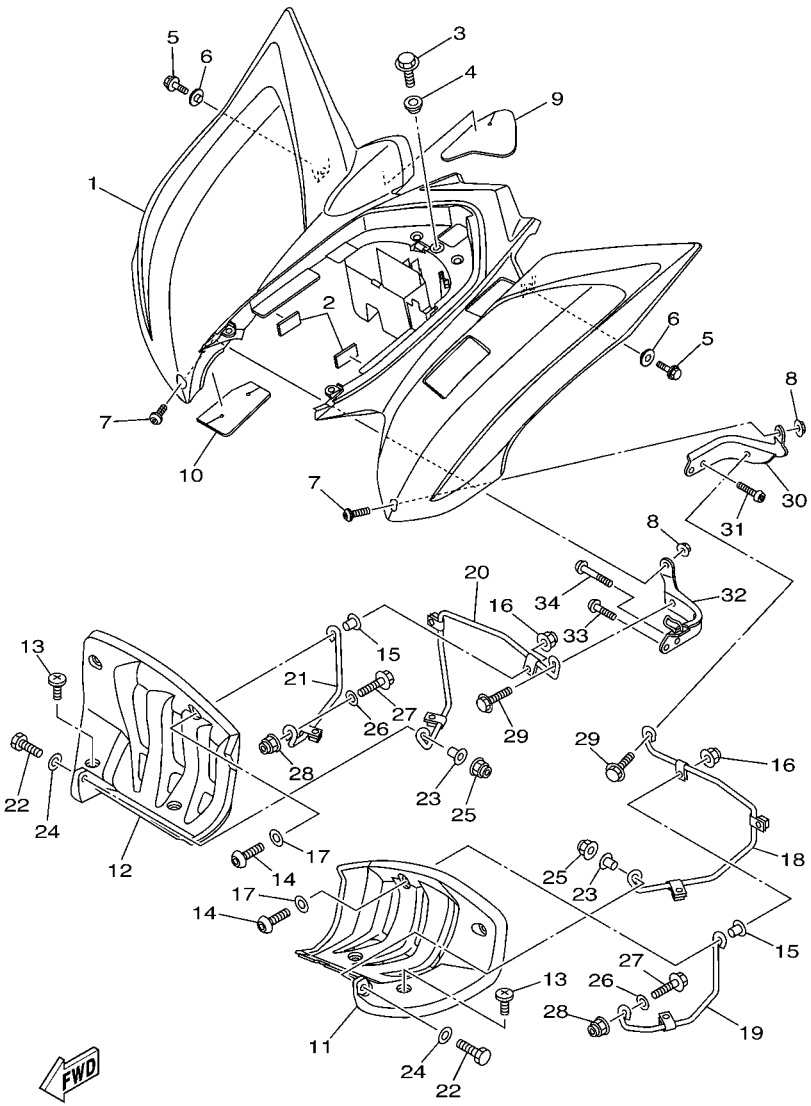

1S31100-E200

REF. NO.	PART NO.	DESCRIPTION	USA	CAN	EUR	OCE		REMARKS
1	1S3–W2161–10	REAR FENDER COMP.	1			1		
	1S3–W216C–10	REAR FENDER COMP.2		1				
	1S3–W216B–10	REAR FENDER COMP.2			1			
2	1S3–2140A–00	DAMPER, STOPPER	2	2	2	2		
3	90105–06084	BOLT, FLANGE	1	1	1	1		
4	90387–06153	COLLAR	1	1	1	1		
5	95812–06014	BOLT, FLANGE	2	2	2	2		
6	90387–06153	COLLAR	2	2	2	2		
7	90111–06038	BOLT,HEX. SOCKET BUTTON	2	2	2	2		
8	95602–06200	NUT, SELF-LOCKING	2	2	2	2		
9	1S3–2163A–00	COVER, REAR FENDER 1	1	1	1	1		
10	1S3–2163E–00	COVER, REAR FENDER 2	1	1	1	1		
11	5TG–21621–00	FLAP	1	1	1	1		
12	5TG–21691–00	FLAP	1	1	1	1		
13	90154–05013	SCREW, BINDING	6	6	6	6		
14	92012–06025	BOLT, BUTTON HEAD	2	2	2	2		
15	90560–06201	SPACER	2	2	2	2		
16	95602–06200	NUT, SELF-LOCKING	2	2	2	2		
17	90201–06076	WASHER, PLATE	2	2	2	2		
18	1S3–2164F–00	STAY 1	1	1	1	1		
19	1S3–2164H–00	STAY 3	1	1	1	1		
20	5TG–2164G–00	STAY 2	1	1	1	1		
21	1S3–2164J–00	STAY 4	1	1	1	1		
22	97027–06025	BOLT	2	2	2	2		
23	90387–06074	COLLAR	2	2	2	2		
24	90201–06093	WASHER, PLATE	2	2	2	2		
25	95607–06200	NUT, SELF U-FLANGE	2	2	2	2		

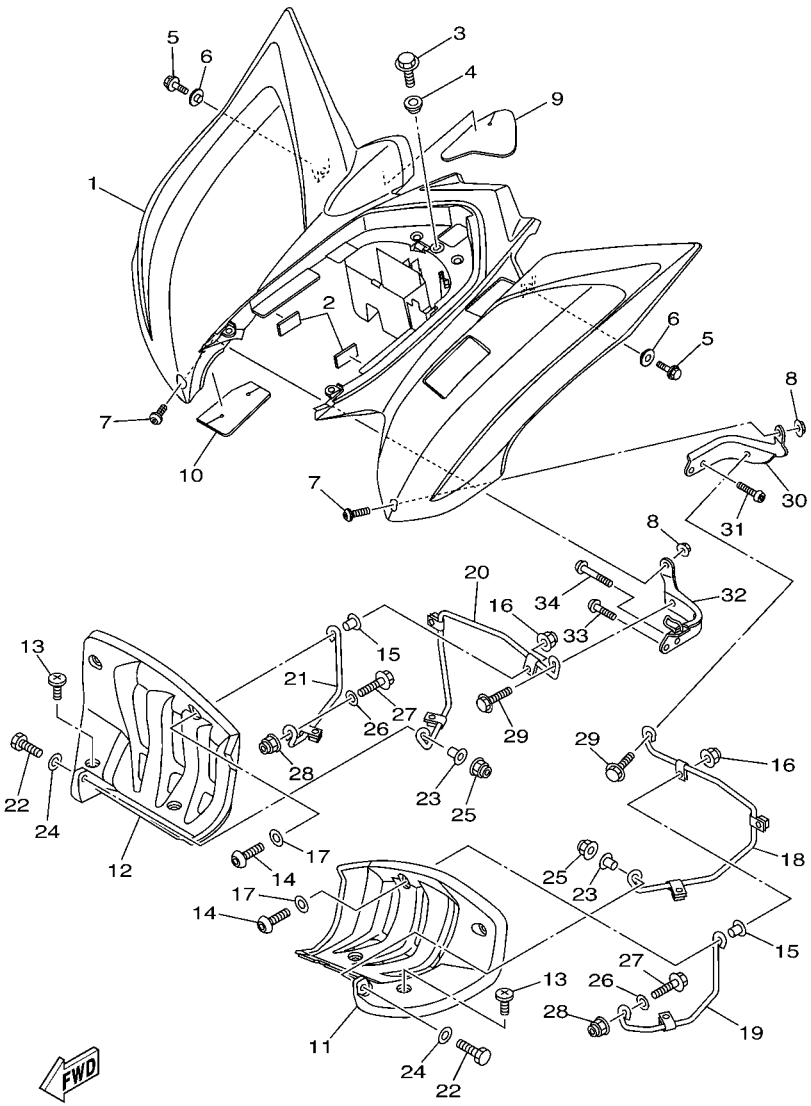

1S31100-E200

FIG. 20 REAR FENDER

REF. NO.	PART NO.	DESCRIPTION	USA	CAN	EUR	OCE		REMARKS
26	90201–08784	WASHER, PLATE	2	2	2	2		
27	95827–08020	BOLT, FLANGE	2	2	2	2		
28	95607–08200	NUT, SELF-LOCKING	2	2	2	2		
29	95827–08016	BOLT, FLANGE	2	2	2	2		
30	1S3–21643–00	STAY, REAR	1	1	1	1		
31	92017–08020	BOLT, BUTTON HEAD	2	2	2	2		
32	1S3–21644–00	STAY, REAR	1	1	1	1		
33	92017–08016	BOLT, BUTTON HEAD	1	1	1	1		
34	92017–08035	BOLT, BUTTON HEAD	1	1	1	1		

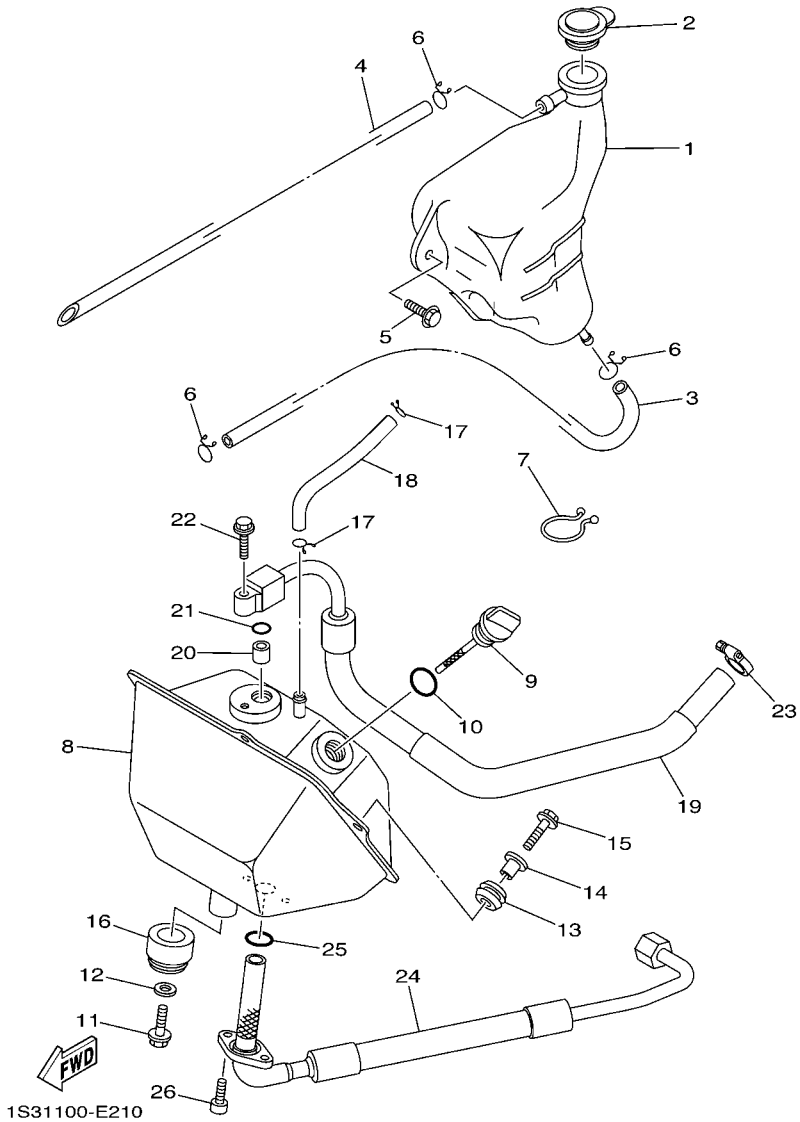

FIG. 21 OIL TANK

REF. NO.	PART NO.	DESCRIPTION	USA	CAN	EUR	OCE		REMARKS
1	5KM–21871–00	TANK, RECOVERY	1	1	1	1		
2	1S3–21875–00	CAP	1	1	1	1		
3	90445–09M30	HOSE (L630)	1	1	1	1		
4	90445–09777	HOSE (L300)	1	1	1	1		
5	90119–06152	BOLT, WITH WASHER	2	2	2	2		
6	90467–08003	CLIP	3	3	3	3		
7	90464–23041	CLAMP	2	2	2	2		
8	1S3–21750–00	OIL TANK ASSY	1	1	1	1		
9	5LP–21761–01	GAUGE, LEVEL	1	1	1	1		
10	93210–21190	O-RING	1	1	1	1		
11	95807–08016	BOLT, FLANGE	1	1	1	1		
12	90201–082A6	WASHER, PLATE	1	1	1	1		
13	90480–13459	GROMMET	2	2	2	2		
14	90387–061N6	COLLAR	2	2	2	2		
15	95827–06020	BOLT, FLANGE	2	2	2	2		
16	90480–24004	GROMMET	1	1	1	1		
17	90467–10008	CLIP	2	2	2	2		
18	90445–11034	HOSE (L147)	1	1	1	1		
19	1S3–13465–00	HOSE, OIL 2	1	1	1	1		
20	99530–10114	PIN, DOWEL	1	1	1	1		
21	93210–10197	O-RING	1	1	1	1		
22	95027–06025	BOLT, FLANGE	1	1	1	1		
23	90450–22017	HOSE CLAMP ASSY	1	1	1	1		
24	1S3–13464–00	HOSE, OIL 1	1	1	1	1		
25	93210–16629	O-RING	1	1	1	1		
26	91317–06016	BOLT	2	2	2	2		

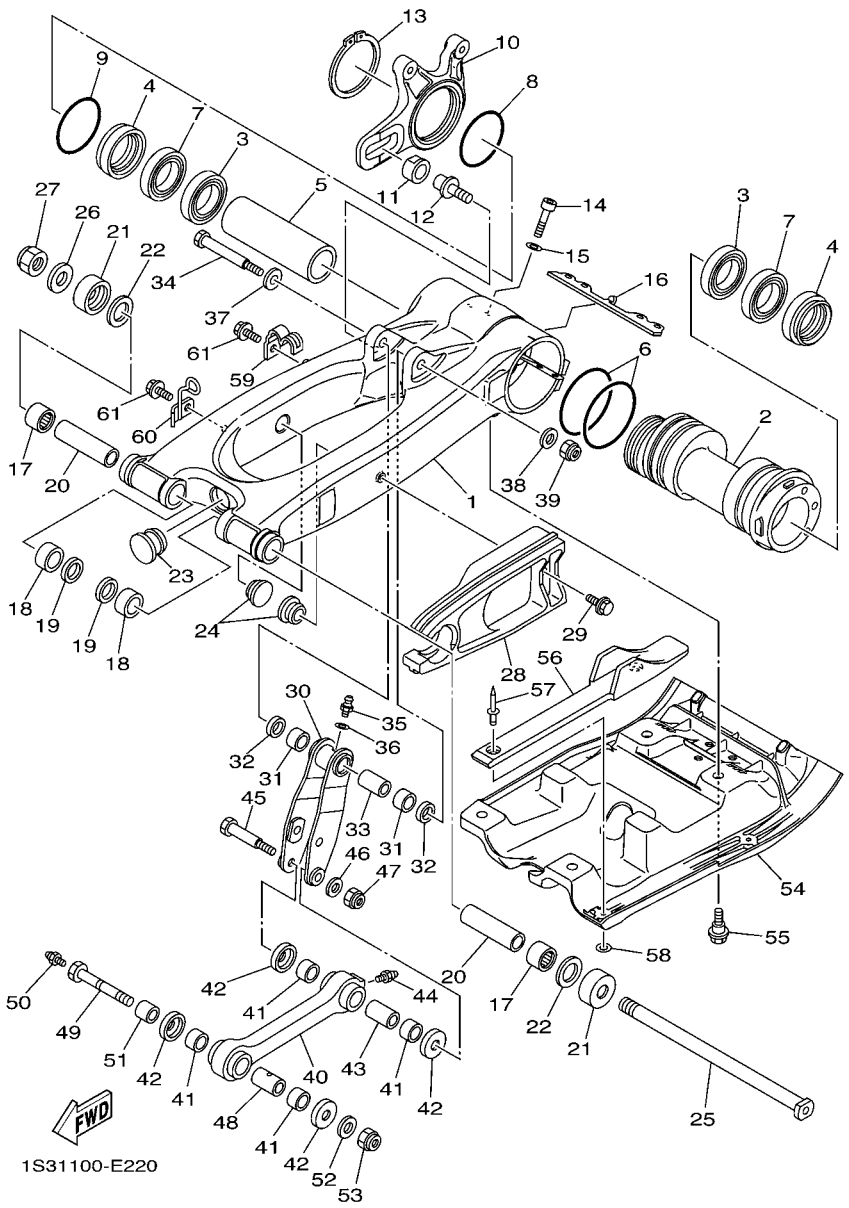

FIG. 22 REAR ARM

REF. NO.	PART NO.	DESCRIPTION	USA	CAN	EUR	OCE		REMARKS
1	1S3–22110–00	REAR ARM COMP.	1	1	1	1		
2	1S3–25311–00	HUB, REAR	1	1	1	1		
3	93306–90804	BEARING	2	2	2	2		
4	93106–46003	OIL SEAL	2	2	2	2		
5	1S3–25317–00	SPACER, BEARING	1	1	1	1		
6	1S3–23147–01	O-RING	2	2	2	2		
7	93306–90805	BEARING	2	2	2	2		
8	93210–66001	O-RING	1	1	1	1		
9	93210–71001	O-RING	1	1	1	1		
10	1S3–25721–00	BRACKET, CALIPER	1	1	1	1		
11	90387–16014	COLLAR	1	1	1	1		
12	90110–12001	BOLT, HEXAGON SOCKET HEAD	1	1	1	1		
13	93410–67085	CIRCLIP	1	1	1	1		
14	91314–08040	BOLT	4	4	4	4		
15	92903–08600	WASHER, PLATE	4	4	4	4		
16	1S3–22475–00	SEAL, DUST	1	1	1	1		
17	93317–22237	BEARING	2	2	2	2		
18	90380–22111	BUSH, SOLID	2	2	2	2		
19	93106–22019	OIL SEAL (DC 22-28-8)	2	2	2	2		
20	1S3–22184–00	BUSH	2	2	2	2		
21	4X7–22129–00	COVER, THRUST 2	2	2	2	2		
22	3YF–22149–00	WASHER	2	2	2	2		
23	1S3–22417–00	PLUG	1	1	1	1		
24	90338–23004	PLUG	2	2	2	2		
25	1S3–22141–00	SHAFT, PIVOT	1	1	1	1		
26	90201–16018	WASHER, PLATE	1	1	1	1		
27	90185–16002	NUT, SELF-LOCKING	1	1	1	1		

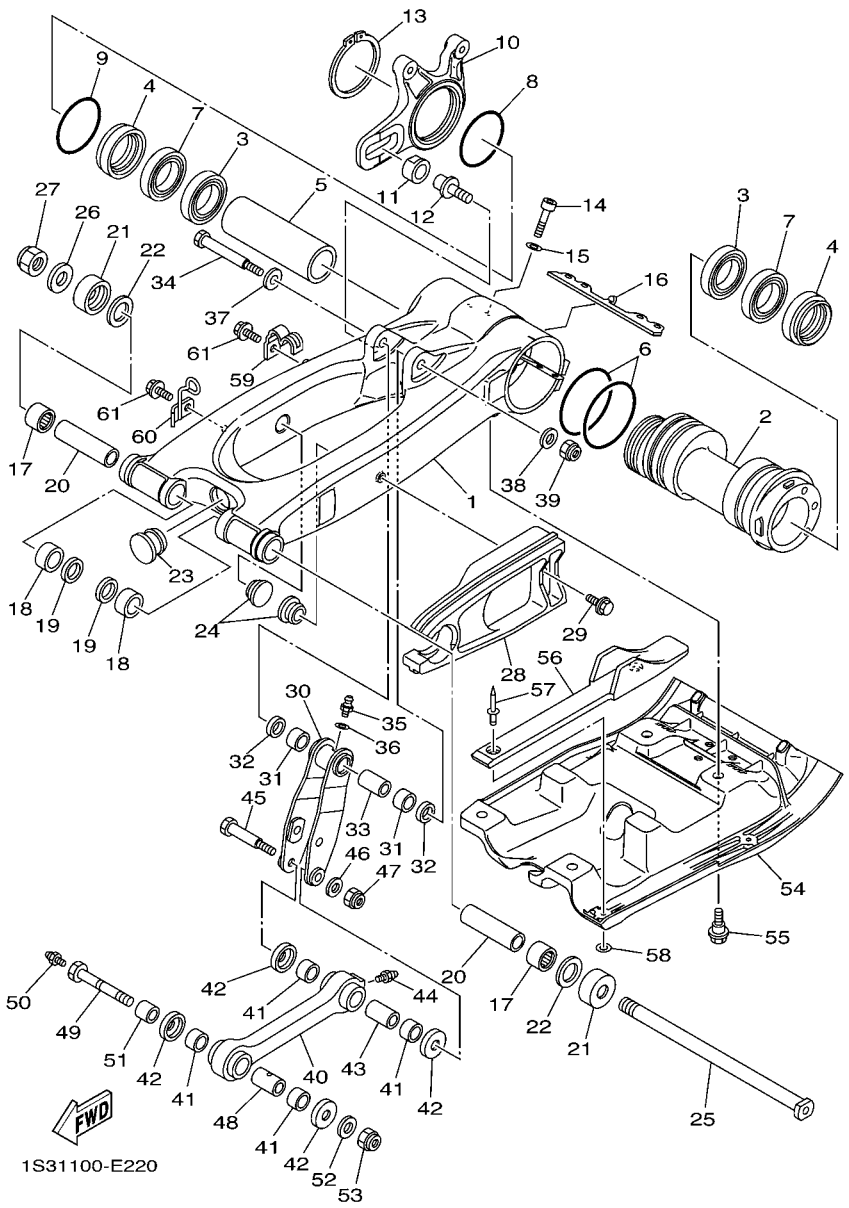

FIG. 22 REAR ARM

REF. NO.	PART NO.	DESCRIPTION	USA	CAN	EUR	OCE		REMARKS
28	1S3–22151–00	SEAL, GUARD	1	1	1	1		
29	90109–06172	BOLT	1	1	1	1		
30	1S3–2217A–00	ARM, RELAY	1	1	1	1		
31	90383–20033	BUSH, FORMED	2	2	2	2		
32	93109–20076	OIL SEAL	2	2	2	2		
33	90387–12021	COLLAR	1	1	1	1		
34	90109–10018	BOLT	1	1	1	1		
35	93700–06004	NIPPLE, GREASE	1	1	1	1		
36	90201–063F3	WASHER, PLATE	1	1	1	1		
37	90201–12030	WASHER, PLATE	1	1	1	1		
38	90201–10034	WASHER, PLATE	1	1	1	1		
39	90185–10012	NUT, SELF-LOCKING	1	1	1	1		
40	1S3–2217F–00	ROD, CONNECTING 1	1	1	1	1		
41	90383–20032	BUSH, FORMED	4	4	4	4		
42	5YT–22129–00	COVER, THRUST 2	4	4	4	4		
43	90387–125K2	COLLAR	1	1	1	1		
44	93700–06004	NIPPLE, GREASE	1	1	1	1		
45	90109–10020	BOLT	1	1	1	1		
46	90201–10035	WASHER, PLATE	1	1	1	1		
47	90185–10012	NUT, SELF-LOCKING	1	1	1	1		
48	90387–12010	COLLAR	1	1	1	1		
49	90109–12009	BOLT	1	1	1	1		
50	93700–06004	NIPPLE, GREASE	1	1	1	1		
51	90387–12028	COLLAR	1	1	1	1		
52	90201–12032	WASHER, PLATE	1	1	1	1		
53	90185–12007	NUT, SELF-LOCKING	1	1	1	1		
54	1S3–2219X–00	COVER	1	1	1	1		

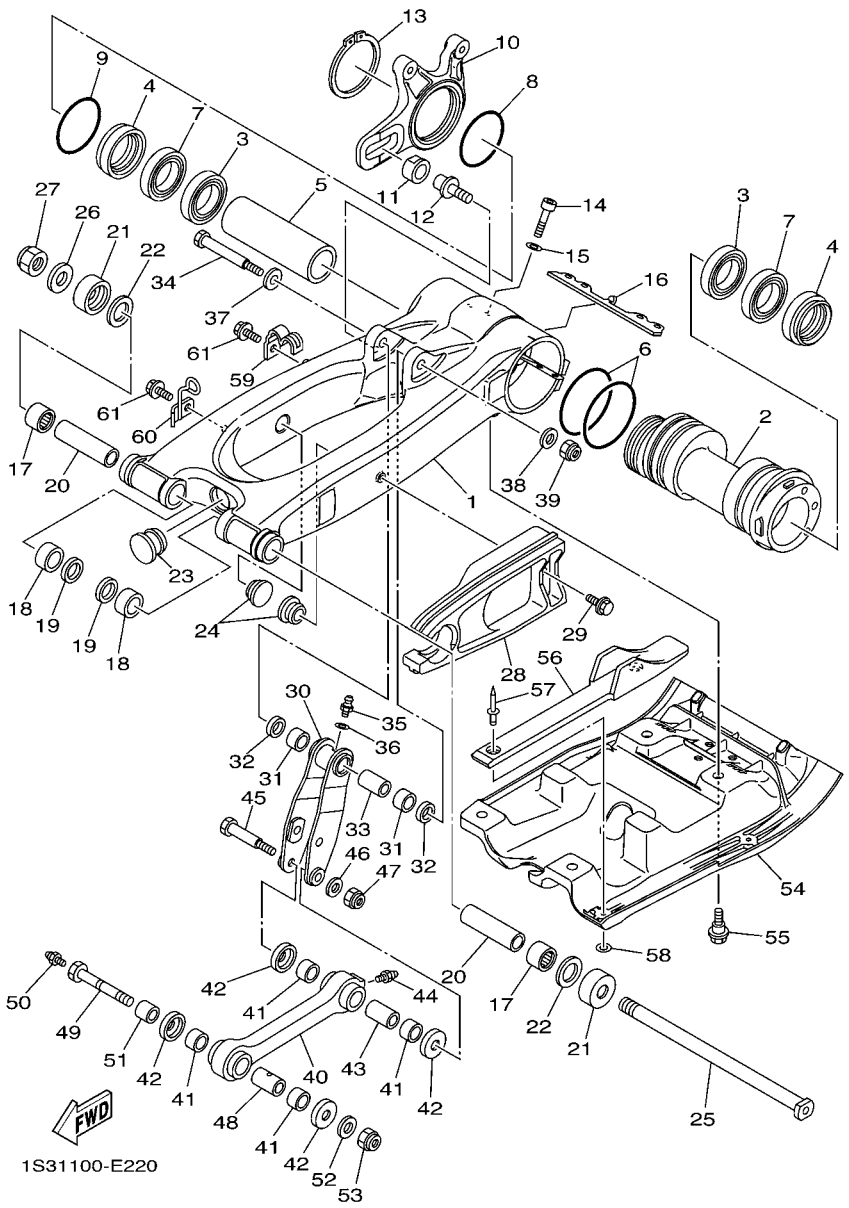

FIG. 22 REAR ARM

REF. NO.	PART NO.	DESCRIPTION	USA	CAN	EUR	OCE		REMARKS
55	90109–06199	BOLT	4	4	4	4		
56	1S3–22153–00	GUARD, CHAIN	1	1	1	1		
57	90267–47187	RIVET, BLIND	2	2	2	2		
58	90201–04027	WASHER, PLATE	2	2	2	2		
59	1S3–25886–00	HOLDER, BRAKE HOSE	1	1	1	1		
60	1S3–23317–00	HOLDER, CABLE	1	1	1	1		
61	95022–06012	BOLT, FLANGE	2	2	2	2		

FIG. 23 REAR SUSPENSION

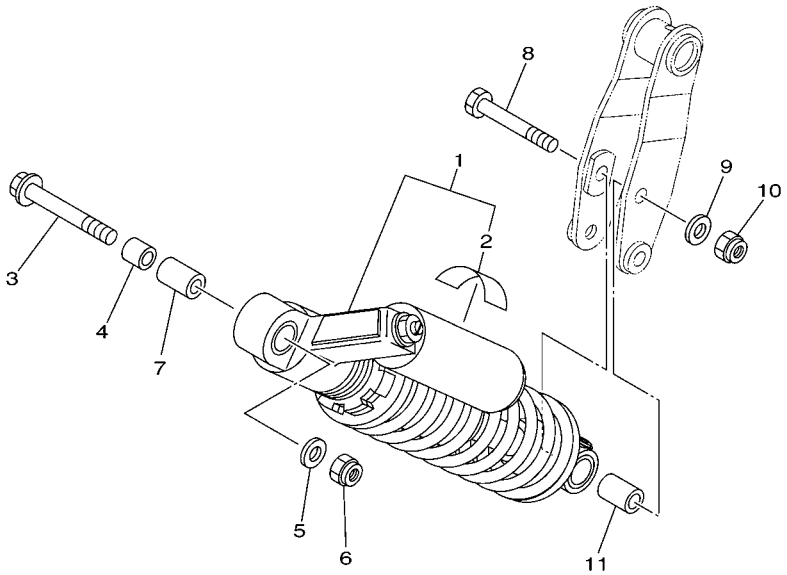

1S31100-E230

REF. NO.	PART NO.	DESCRIPTION	USA	CAN	EUR	OCE		REMARKS
1	1S3–22210–30	SHOCK ABSORBER ASSY, REAR	1					
	1S3–22210–50	SHOCK ABSORBER ASSY, REAR		1				
	1S3–22210–40	SHOCK ABSORBER ASSY, REAR			1	1		
2	4AA–22259–80	.LABEL, WARNING	1					
	4AA–22259–70	.LABEL, WARNING		1				
	4AA–22259–40	.LABEL, WARNING			1	1		
3	90105–12038	BOLT, FLANGE	1	1	1	1		
4	90387–12028	COLLAR	1	1	1	1		
5	90201–12032	WASHER, PLATE	1	1	1	1		
6	90185–12007	NUT, SELF-LOCKING	1	1	1	1		
7	90387–12020	COLLAR	1	1	1	1		
8	90109–10019	BOLT	1	1	1	1		
9	90201–10036	WASHER, PLATE	1	1	1	1		
10	90185–10012	NUT, SELF-LOCKING	1	1	1	1		
11	90387–127W0	COLLAR	1	1	1	1		

FIG. 24 STEERING

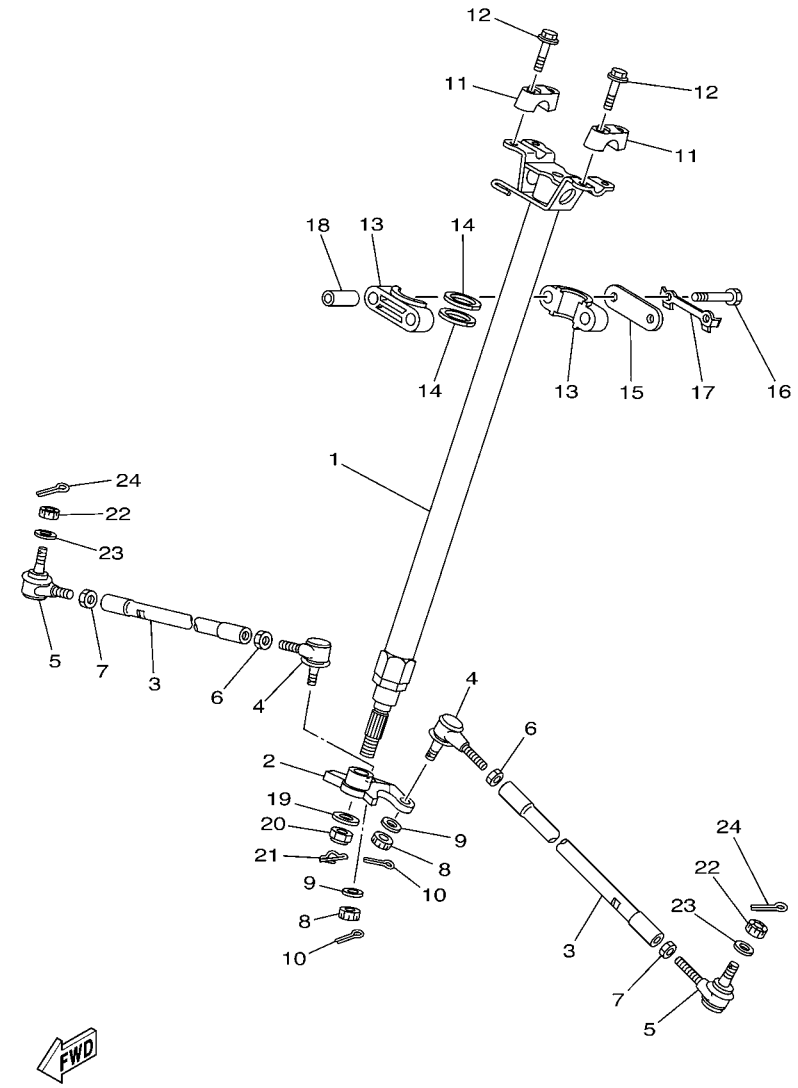

1S31100-E240

REF. NO.	PART NO.	DESCRIPTION	USA	CAN	EUR	OCE		REMARKS
1	1S3–23813–00	COLUMN, STEERING 2	1	1	1	1		
2	5TG–23816–00	ARM, PITMAN	1	1	1	1		
3	1S3–23831–00	ROD, TIE	2	2	2	2		
4	1S3–23841–00	JOINT, UNIVERSAL 1	2	2	2	2		
5	1S3–23845–00	JOINT, UNIVERSAL 2	2	2	2	2		
6	90170–12055	NUT	2	2	2	2		
7	90170–12054	NUT	2	2	2	2		(RH. THREAD)
8	90171–10001	NUT, CASTLE	2	2	2	2		
9	90209–10229	WASHER	2	2	2	2		
10	91402–20020	PIN, COTTER	2	2	2	2		
11	8K1–23814–00	HOLDER, HANDLE	2	2	2	2		
12	95827–08030	BOLT, FLANGE	4	4	4	4		
13	1UY–23812–00	PLANE BEARING, STEERING	2	2	2	2		
14	93112–31011	OIL SEAL	2	2	2	2		
15	1UY–23868–01	BRACKET, STEERING LOWER	1	1	1	1		
16	97027–08060	BOLT	2	2	2	2		
17	1UY–23894–01	WASHER, LOCK 1	1	1	1	1		
18	90387–090R0	COLLAR	2	2	2	2		
19	90201–14226	WASHER, PLATE	1	1	1	1		
20	90185–14070	NUT, SELF-LOCKING	1	1	1	1		
21	90468–16191	CLIP	1	1	1	1		
22	90171–10001	NUT, CASTLE	2	2	2	2		
23	90209–10229	WASHER	2	2	2	2		
24	91402–20020	PIN, COTTER	2	2	2	2		

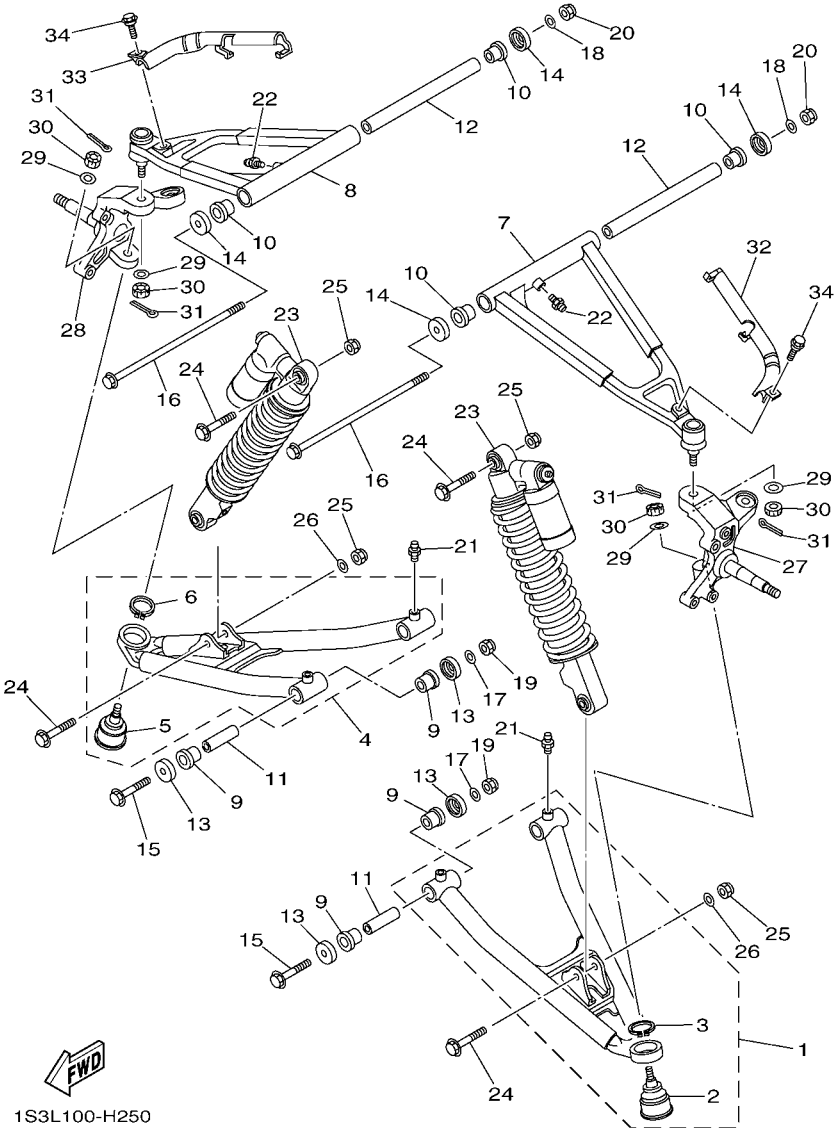

FIG. 25 FRONT SUSPENSION & WHEEL

REF. NO.	PART NO.	DESCRIPTION	USA	CAN	EUR	OCE		REMARKS
1	5TG–23570–00	FRONT LOWER ARM COMP. (LEFT)	1	1	1	1		
2	5LP–23579–00	.BALL JOINT 2	1	1	1	1		
3	99009–30400	.CIRCLIP	1	1	1	1		
4	5TG–23580–00	FRONT LOWER ARM COMP. (RIGHT)	1	1	1	1		
5	5LP–23579–00	.BALL JOINT 2	1	1	1	1		
6	99009–30400	.CIRCLIP	1	1	1	1		
7	5TG–23540–00	FRONT UPPER ARM COMP. (LEFT)	1	1	1	1		
8	5TG–23550–00	FRONT UPPER ARM COMP. (RIGHT)	1	1	1	1		
9	90381–15088	BUSH, SOLID	8	8	8	8		
10	90381–15088	BUSH, SOLID	4	4	4	4		
11	90387–101R3	COLLAR	4	4	4	4		
12	90387–100Y6	COLLAR	2	2	2	2		
13	5YT–23517–00	COVER, THRUST 1	8	8	8	8		
14	5YT–23517–00	COVER, THRUST 1	4	4	4	4		
15	90105–10135	BOLT, FLANGE	4	4	4	4		
16	90105–10132	BOLT, FLANGE	2	2	2	2		
17	90201–10037	WASHER, PLATE	4	4	4	4		
18	90201–10037	WASHER, PLATE	2	2	2	2		
19	90185–10012	NUT, SELF-LOCKING	4	4	4	4		
20	90185–10012	NUT, SELF-LOCKING	2	2	2	2		
21	93700–06004	NIPPLE, GREASE	4	4	4	4		
22	93700–06004	NIPPLE, GREASE	2	2	2	2		
23	1S3–23350–10	SHOCK ABSORBER ASSY	2					
	1S3–23350–20	SHOCK ABSORBER ASSY		2				
	1S3–23350–30	SHOCK ABSORBER ASSY			2	2		
24	90105–10131	BOLT, FLANGE	4	4	4	4		
25	90185–10012	NUT, SELF-LOCKING	4	4	4	4		

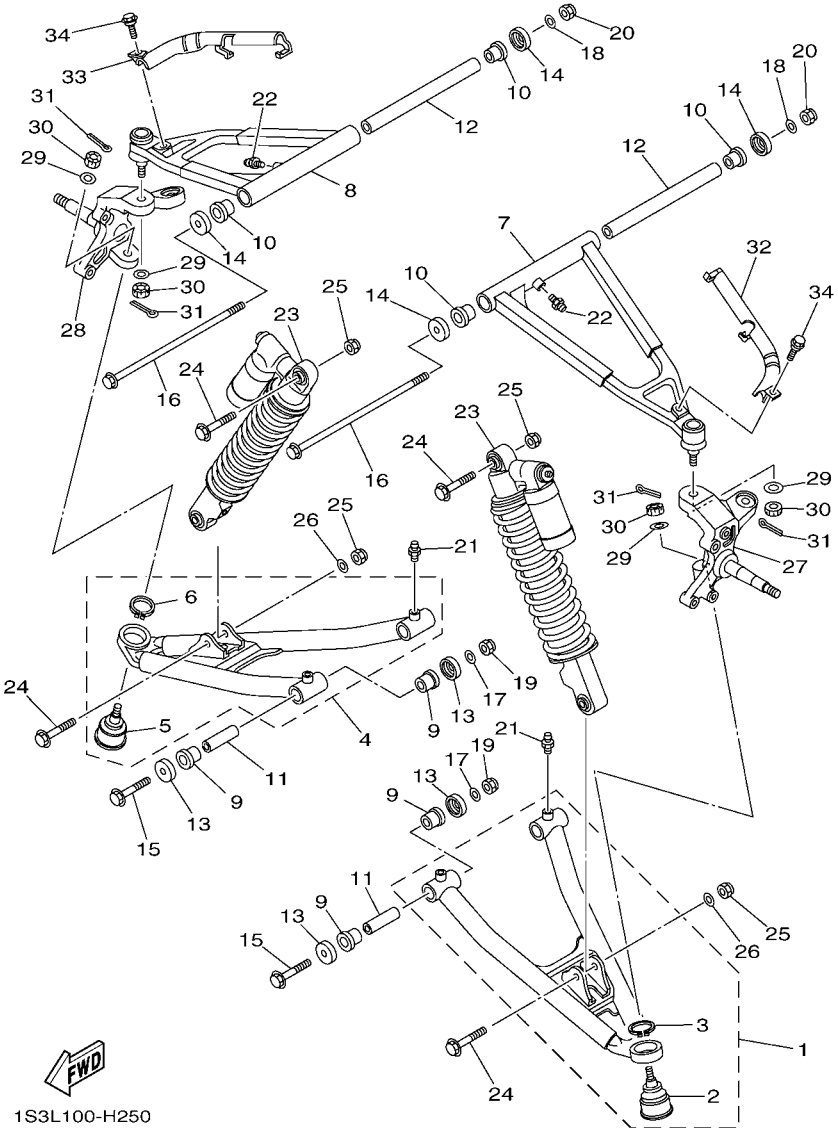

FIG. 25 FRONT SUSPENSION & WHEEL

REF. NO.	PART NO.	DESCRIPTION	USA	CAN	EUR	OCE		REMARKS
26	90201–10035	WASHER, PLATE	2	2	2	2		
27	1S3–23501–00	STEERING KNUCKLE ASSY (LEFT)	1	1	1	1		
28	1S3–23502–00	STEERING KNUCKLE ASSY (RIGHT)	1	1	1	1		
29	90209–10229	WASHER	4	4	4	4		
30	90171–10001	NUT, CASTLE	4	4	4	4		
31	91402–20020	PIN, COTTER	4	4	4	4		
32	5TG–25875–00	HOLDER, BRAKE HOSE 1	1	1	1	1		
33	5TG–25876–00	HOLDER, BRAKE HOSE 2	1	1	1	1		
34	90109–067F4	BOLT	2	2	2	2		

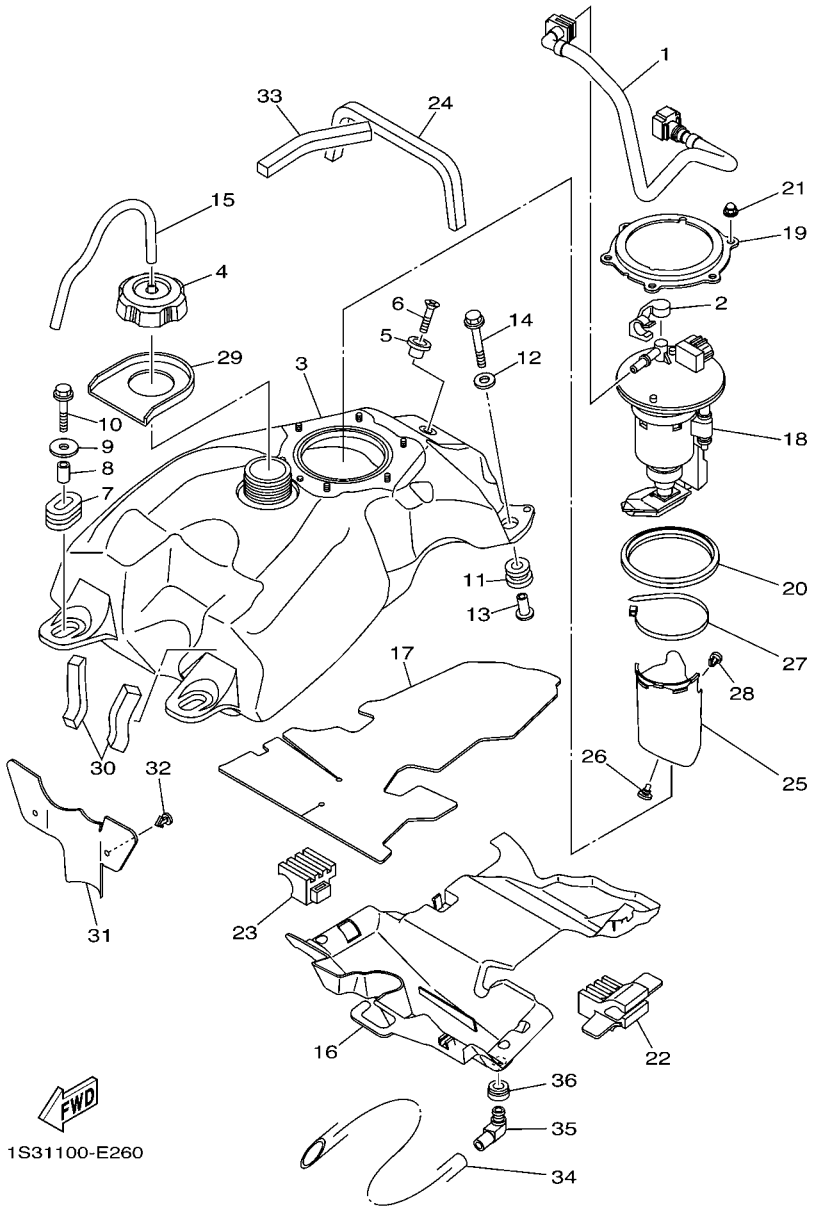

FIG. 26 FUEL TANK

REF. NO.	PART NO.	DESCRIPTION	USA	CAN	EUR	OCE		REMARKS
1	1S3–13971–00	PIPE, FUEL 1	1	1	1	1		
2	90464–14004	CLAMP	1	1	1	1		
3	1S3–24110–00	FUEL TANK COMP.	1	1	1	1		
4	2FJ–24610–00	CAP ASSY	1	1	1	1		
5	4EW–2412F–00	BRACKET, SEAT	1	1	1	1		
6	98702–06025	SCREW, FLAT HEAD	1	1	1	1		
7	90480–01017	GROMMET	2	2	2	2		
8	90387–06M17	COLLAR	2	2	2	2		
9	90201–06090	WASHER, PLATE	2	2	2	2		
10	95802–06035	BOLT, FLANGE	2	2	2	2		
11	90480–18005	GROMMET	2	2	2	2		
12	90201–06033	WASHER, PLATE	2	2	2	2		
13	90387–06098	COLLAR	2	2	2	2		
14	95802–06035	BOLT, FLANGE	2	2	2	2		
15	90445–083J4	HOSE (L340)	1	1	1	1		
16	1S3–2414H–00	DAMPER, PLATE 1	1	1	1	1		
17	1S3–2416F–00	INSULATOR, FUEL TANK 1	1	1	1	1		
18	1S3–13907–02	FUEL PUMP COMP.	1	1	1	1		
19	1S3–24491–00	BRACKET, FUEL PUMP	1	1	1	1		
20	1S3–24486–00	O-RING	1	1	1	1		
21	95307–06800	NUT	6	6	6	6		
22	1S3–24278–00	STOPPER 1	1	1	1	1		
23	1S3–24279–00	STOPPER 2	1	1	1	1		
24	1S3–24181–00	DAMPER, LOCATING 1	1	1	1	1		
25	1S3–24452–00	COVER	1	1	1	1		
26	90338–05008	PLUG	2	2	2	2		
27	90464–66001	CLAMP	1	1	1	1		

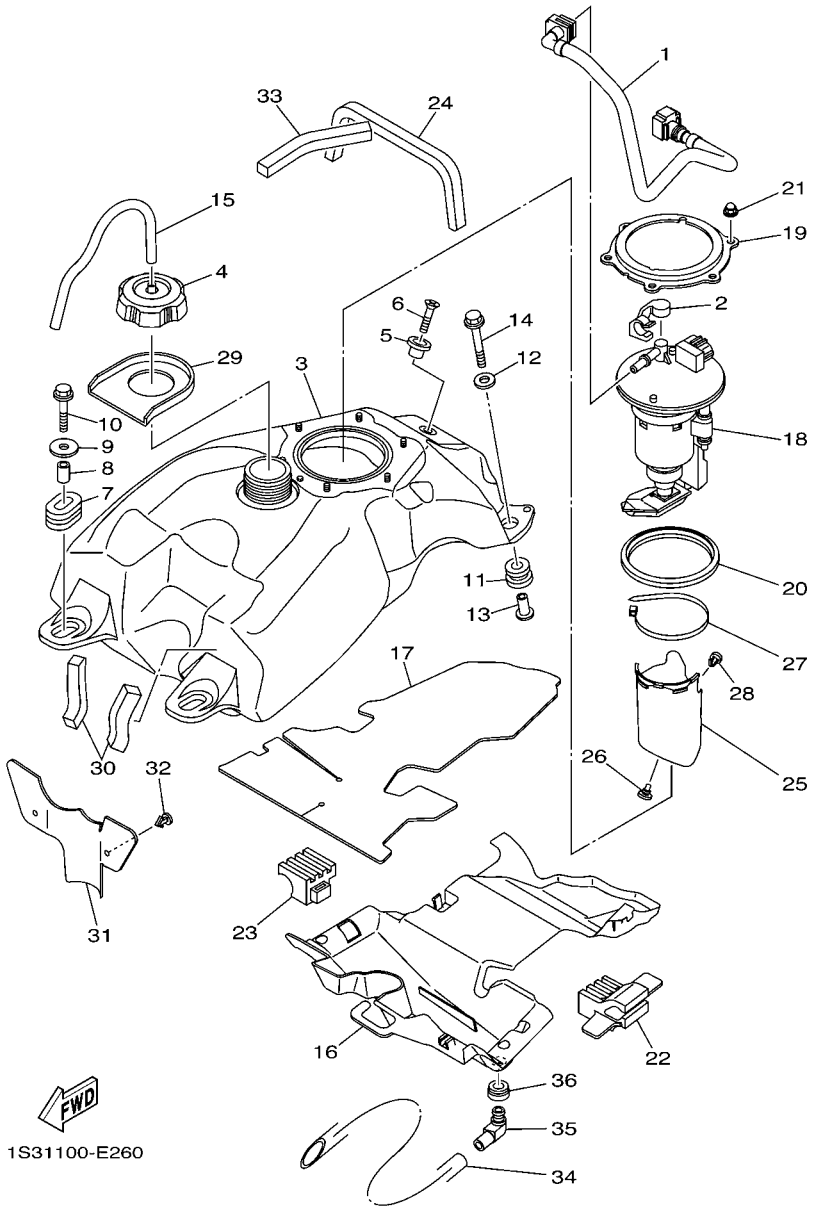

FIG. 26 FUEL TANK

REF. NO.	PART NO.	DESCRIPTION	USA	CAN	EUR	OCE		REMARKS
28	90269–07011	RIVET	1	1	1	1		
29	1S3–2414J–00	DAMPER, PLATE 2	1	1	1	1		
30	1S3–24182–00	DAMPER, LOCATING 2	2	2	2	2		
31	1S3–2413X–00	PLATE	1	1	1	1		
32	90269–05055	RIVET	2	2	2	2		
33	1S3–24183–00	DAMPER, LOCATING 3	1	1	1	1		
34	90445–16007	HOSE (L400)	1	1	1	1		
35	31A–14419–00	PIPE	1	1	1	1		
36	31A–14435–00	GROMMET	1	1	1	1		

FIG. 27 SEAT

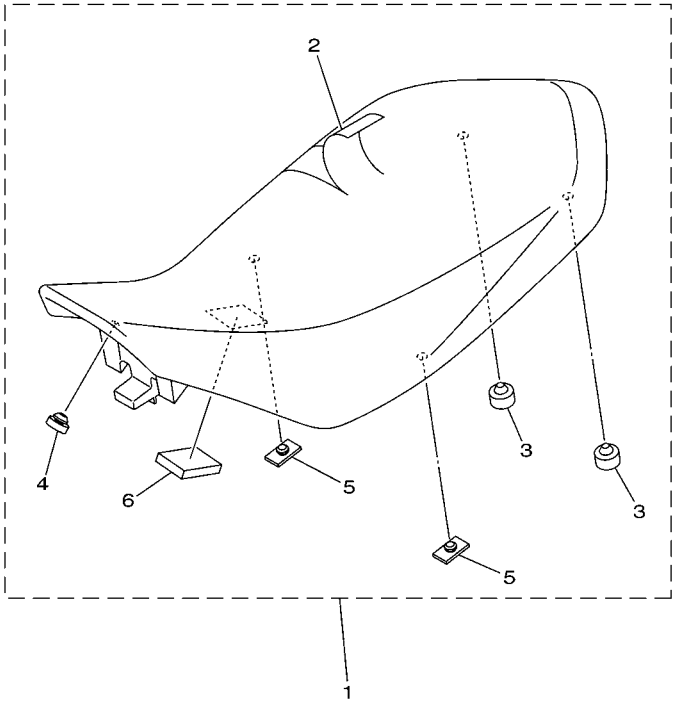

1S31100-E270

REF. NO.	PART NO.	DESCRIPTION	USA	CAN	EUR	OCE		REMARKS
1	1S3–24710–30	SINGLE SEAT ASSY	1	1	1	1		
2	1S3–24731–30	.COVER, SEAT	1	1	1	1		
3	371–27114–00	.STOPPER, MAIN STAND	2	2	2	2		
4	22W–24741–00	.PAD, SEAT	1	1	1	1		
5	509–24724–00	.DAMPER, SEAT	2	2	2	2		
6	1S3–24723–00	.DAMPER, SEAT	1	1	1	1		

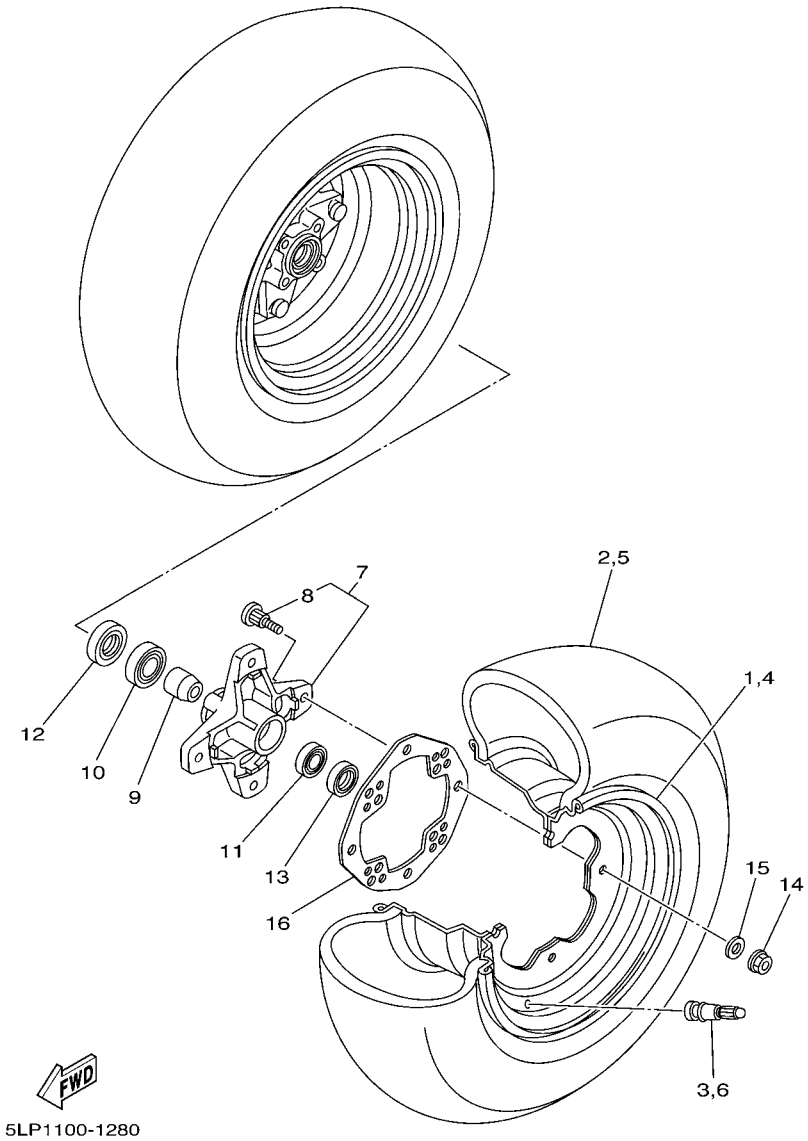

FIG. 28 FRONT WHEEL

REF. NO.	PART NO.	DESCRIPTION	USA	CAN	EUR	OCE		REMARKS
1	5LP–25180–20	WHEEL COMP.	1	1	1	1		
2	94107–10015	TIRE (AT21X7R10 KT341 T/L N)	1	1	1	1		DUNLOP
3	93900–00030	VALVE, RIM (TR412)	1	1	1	1		TAIHEIYO
4	5LP–25180–20	WHEEL COMP.	1	1	1	1		
5	94107–10015	TIRE (AT21X7R10 KT341 T/L N)	1	1	1	1		DUNLOP
6	93900–00030	VALVE, RIM (TR412)	1	1	1	1		TAIHEIYO
7	1S3–25111–10	HUB, FRONT	2	2	2	2		
8	90114–10006	.BOLT, SERRATION	4	4	4	4		
9	5LP–25117–00	SPACER, BEARING	2	2	2	2		
10	93306–00446	BEARING	2	2	2	2		
11	93306–20231	BEARING	2	2	2	2		
12	93105–26026	OIL SEAL	2	2	2	2		
13	93102–22216	OIL SEAL	2	2	2	2		
14	95702–10500	NUT, FLANGE	8	8	8	8		
15	92902–10200	WASHER	8	8	8	8		
16	1S3–25127–00	COVER, PLATE	2	2	2	2		

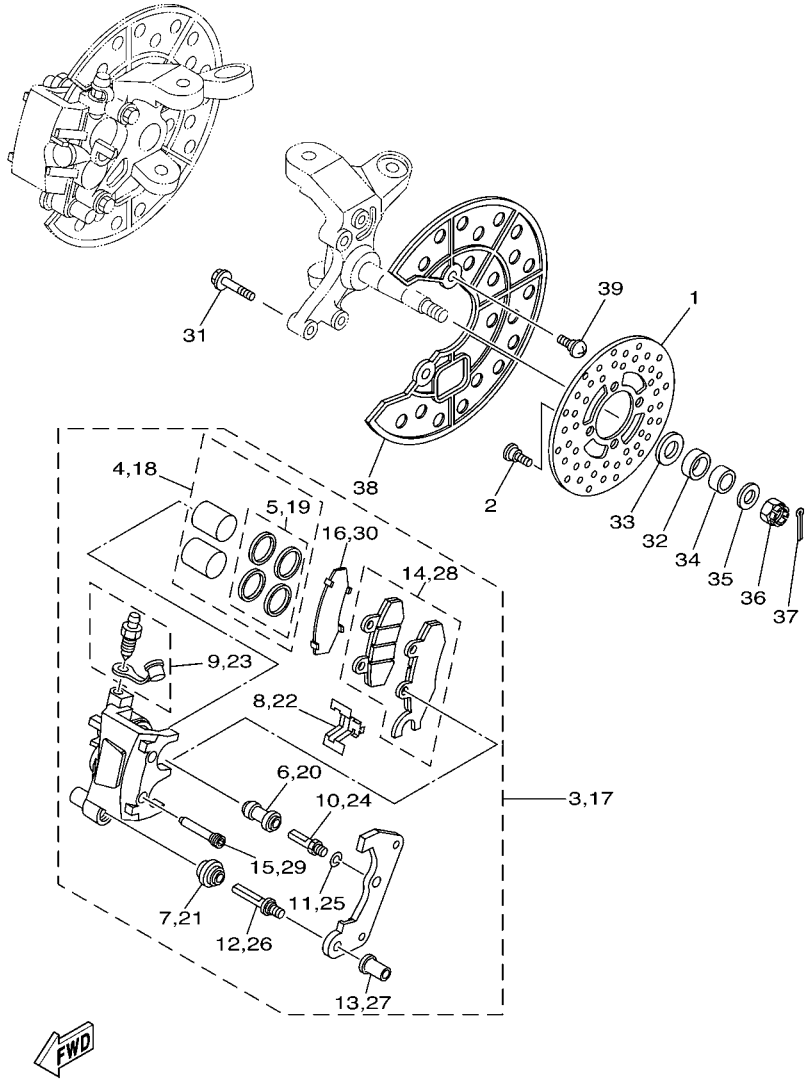

1S31100-E290

FIG. 29 FRONT BRAKE CALIPER

REF. NO.	PART NO.	DESCRIPTION	USA	CAN	EUR	OCE		REMARKS
1	3GD–2582T–10	DISC, BRAKE (LEFT)	2	2	2	2		
2	90109–08082	BOLT	8	8	8	8		
3	1S3–2580T–00	CALIPER ASSY (LEFT)	1	1	1	1		
4	5TG–W0057–00	.PISTON ASSY, CALIPER	1	1	1	1		
5	3LC–W0047–50	..CALIPER SEAL KIT	1	1	1	1		
6	1UY–25937–51	.BOOT 2	1	1	1	1		
7	3JD–25917–00	.BOOT, CALIPER	1	1	1	1		
8	3JD–25919–00	.SUPPORT, PAD	1	1	1	1		
9	1UY–W0048–50	.BLEED SCREW KIT	1	1	1	1		
10	1UY–25926–51	.BOLT	1	1	1	1		
11	1UY–25938–51	.WASHER, SPRING	1	1	1	1		
12	3JD–25926–00	.BOLT	1	1	1	1		
13	3JD–25961–00	.NUT	1	1	1	1		
14	1S3–W0045–00	.BRAKE PAD KIT	1	1	1	1		LH
15	5TG–25924–00	.PIN, PAD	2	2	2	2		
16	1S3–25828–00	.SHIM, CALIPER	1	1	1	1		
17	1S3–2580U–00	CALIPER ASSY (RIGHT)	1	1	1	1		
18	5TG–W0057–00	.PISTON ASSY, CALIPER	1	1	1	1		
19	3LC–W0047–50	..CALIPER SEAL KIT	1	1	1	1		
20	1UY–25937–51	.BOOT 2	1	1	1	1		
21	3JD–25917–00	.BOOT, CALIPER	1	1	1	1		
22	3JD–25919–00	.SUPPORT, PAD	1	1	1	1		
23	1UY–W0048–50	.BLEED SCREW KIT	1	1	1	1		
24	1UY–25926–51	.BOLT	1	1	1	1		
25	1UY–25938–51	.WASHER, SPRING	1	1	1	1		
26	3JD–25926–00	.BOLT	1	1	1	1		
27	3JD–25961–00	.NUT	1	1	1	1		

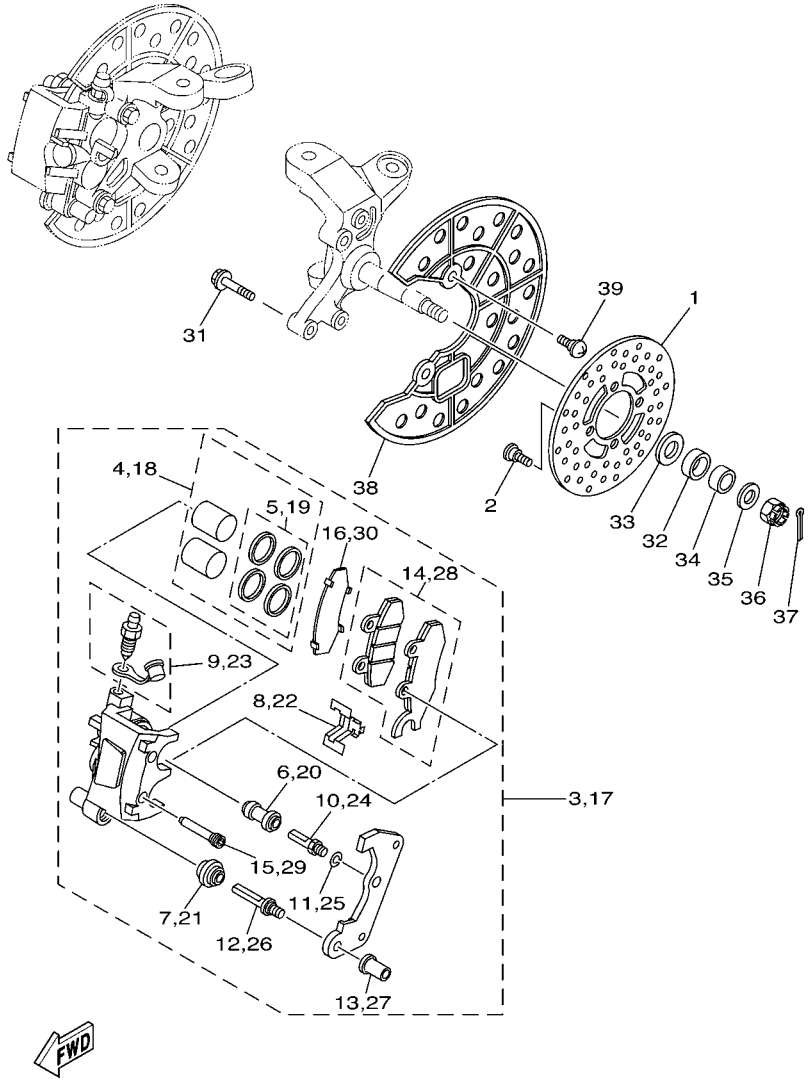

1S31100-E290

FIG. 29 FRONT BRAKE CALIPER

REF. NO.	PART NO.	DESCRIPTION	USA	CAN	EUR	OCE		REMARKS
28	1S3–W0045–10	.BRAKE PAD KIT	1	1	1	1		RH
29	5TG–25924–00	.PIN, PAD	2	2	2	2		
30	1S3–25828–00	.SHIM, CALIPER	1	1	1	1		
31	90105–08520	BOLT, FLANGE	4	4	4	4		
32	90387–20005	COLLAR	2	2	2	2		
33	90201–20022	WASHER, PLATE	2	2	2	2		
34	90387–150R1	COLLAR	2	2	2	2		
35	90201–14586	WASHER, PLATE	2	2	2	2		
36	90171–14002	NUT, CASTLE	2	2	2	2		
37	91402–30025	PIN, COTTER	2	2	2	2		
38	5TG–2514A–00	RING, WHEEL 1 (LEFT)	2	2	2	2		
39	90154–06014	SCREW, BINDING	4	4	4	4		

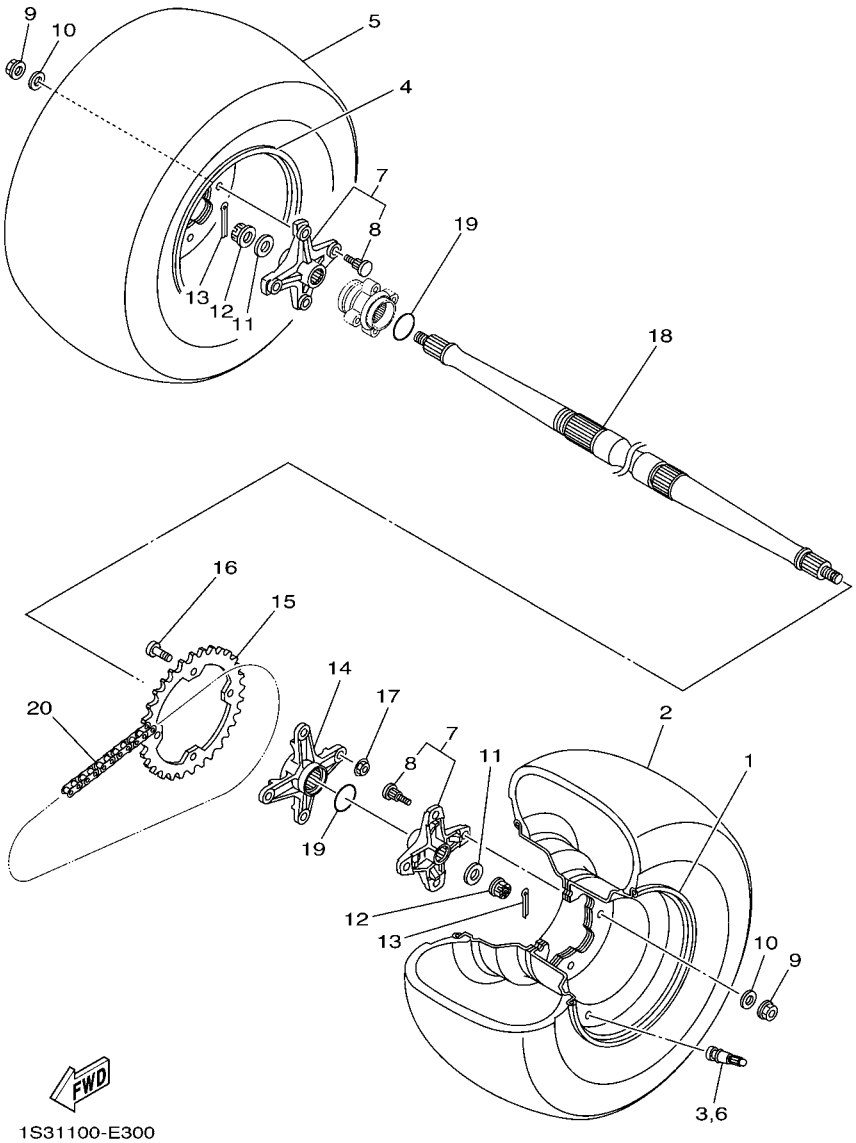

FIG. 30 REAR WHEEL

REF. NO.	PART NO.	DESCRIPTION	USA	CAN	EUR	OCE		REMARKS
1	5LP–25390–20	REAR WHEEL COMP.	1	1	1	1		
2	94110–09012	TIRE(AT20X10-R9 KT345 T/L N)	1	1	1	1		DUNLOP
3	93900–00022	VALVE, RIM (TR413)	1	1	1	1		TAIHEIYO
4	5LP–25390–20	REAR WHEEL COMP.	1	1	1	1		
5	94110–09012	TIRE(AT20X10-R9 KT345 T/L N)	1	1	1	1		DUNLOP
6	93900–00022	VALVE, RIM (TR413)	1	1	1	1		TAIHEIYO
7	1S3–25383–10	COLLAR, WHEEL	2	2	2	2		
8	90114–10013	.BOLT, SERRATION	4	4	4	4		
9	95702–10500	NUT, FLANGE	8	8	8	8		
10	92902–10200	WASHER	8	8	8	8		
11	90201–16023	WASHER, PLATE	2	2	2	2		
12	90171–16002	NUT, CASTLE	2	2	2	2		
13	90252–03001	PIN, COTTER	2	2	2	2		
14	1S3–25386–00	COLLAR, SPROCKET AXLE	1	1	1	1		
15	5TG–25438–10	SPROCKET, DRIVEN (38T)	1	1	1	1		
16	90109–10013	BOLT	4	4	4	4		
17	90185–10011	NUT, SELF-LOCKING	4	4	4	4		
18	1S3–25381–10	AXLE, WHEEL	1	1	1	1		
19	93210–36769	O-RING	2	2	2	2		
20	94582–13098	CHAIN (DID520MXV 98LE)	1	1	1	1		

FIG. 31 REAR BRAKE CALIPER

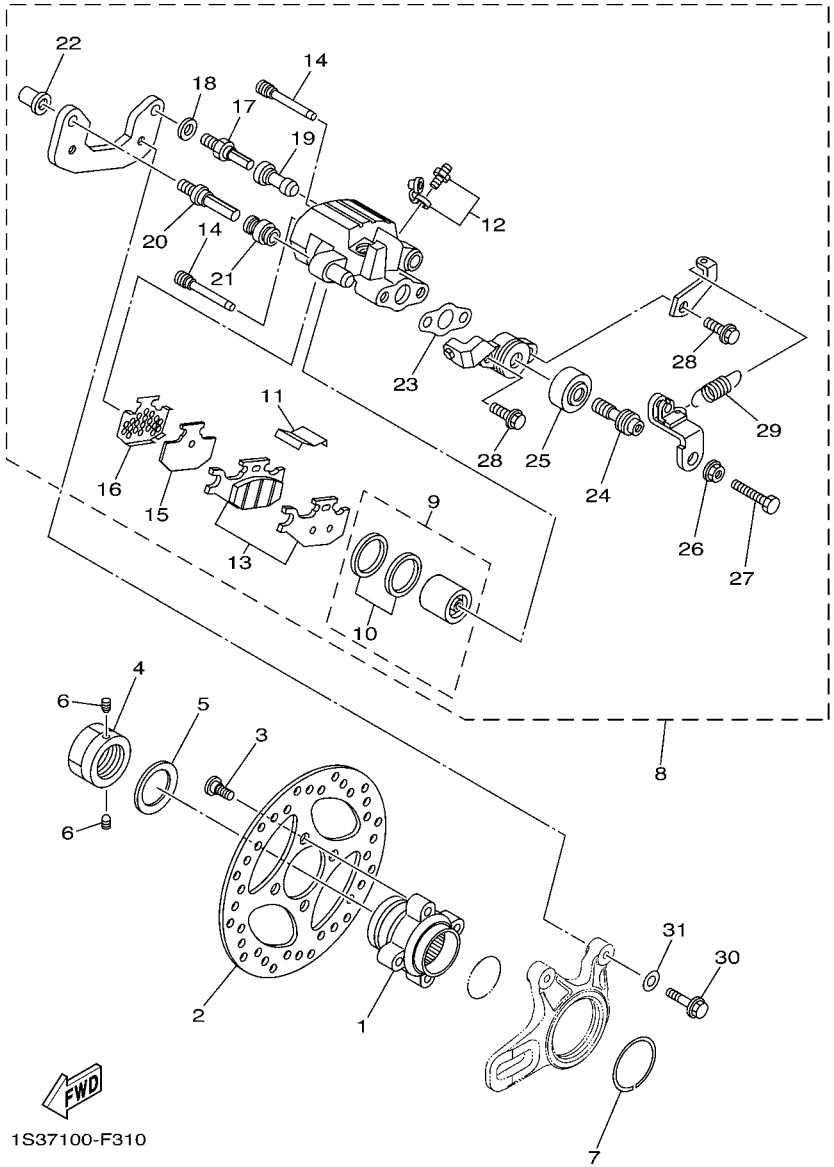

REF. NO.	PART NO.	DESCRIPTION	USA	CAN	EUR	OCE		REMARKS
1	1S3–25712–00	BRACKET, DISC	1	1	1	1		
2	1S3–2582W–10	DISK, REAR BRAKE 2	1	1	1	1		
3	90109–08076	BOLT	4	4	4	4		
4	90179–36003	NUT	1	1	1	1		
5	90208–37001	WASHER, CONICAL SPRING	1	1	1	1		
6	90113–06055	BOLT, SET	2	2	2	2		
7	1S3–25415–00	CIRCLIP	1	1	1	1		
8	1S3–2580V–10	CALIPER ASSY, REAR 1	1	1	1	1		
9	5UG–W0057–00	.PISTON ASSY, CALIPER	1	1	1	1		
10	3GD–W0047–00	..CALIPER SEAL KIT	1	1	1	1		
11	4GY–25919–50	.SUPPORT, PAD	1	1	1	1		
12	1UY–W0048–50	.BLEED SCREW KIT	1	1	1	1		
13	1S3–W0046–01	.BRAKE PAD KIT 2	1	1	1	1		
14	5GH–25924–00	.PIN, PAD	2	2	2	2		
15	5UG–25827–00	.SHIM, CALIPER	1	1	1	1		
16	5GH–25828–00	.SHIM, CALIPER	1	1	1	1		
17	1UY–25926–51	.BOLT	1	1	1	1		
18	1UY–25938–51	.WASHER, SPRING	1	1	1	1		
19	1UY–25937–51	.BOOT 2	1	1	1	1		
20	3JD–25926–00	.BOLT	1	1	1	1		
21	3JD–25917–00	.BOOT, CALIPER	1	1	1	1		
22	3JD–25961–00	.NUT	1	1	1	1		
23	5UG–25898–00	.GASKET	1	1	1	1		
24	1S3–25978–00	.SHAFT L	1	1	1	1		
25	1UY–25974–51	.BOOT	1	1	1	1		
26	1S3–25973–00	.NUT	1	1	1	1		
27	1S3–25972–00	.ADJUSTBOLT	1	1	1	1		

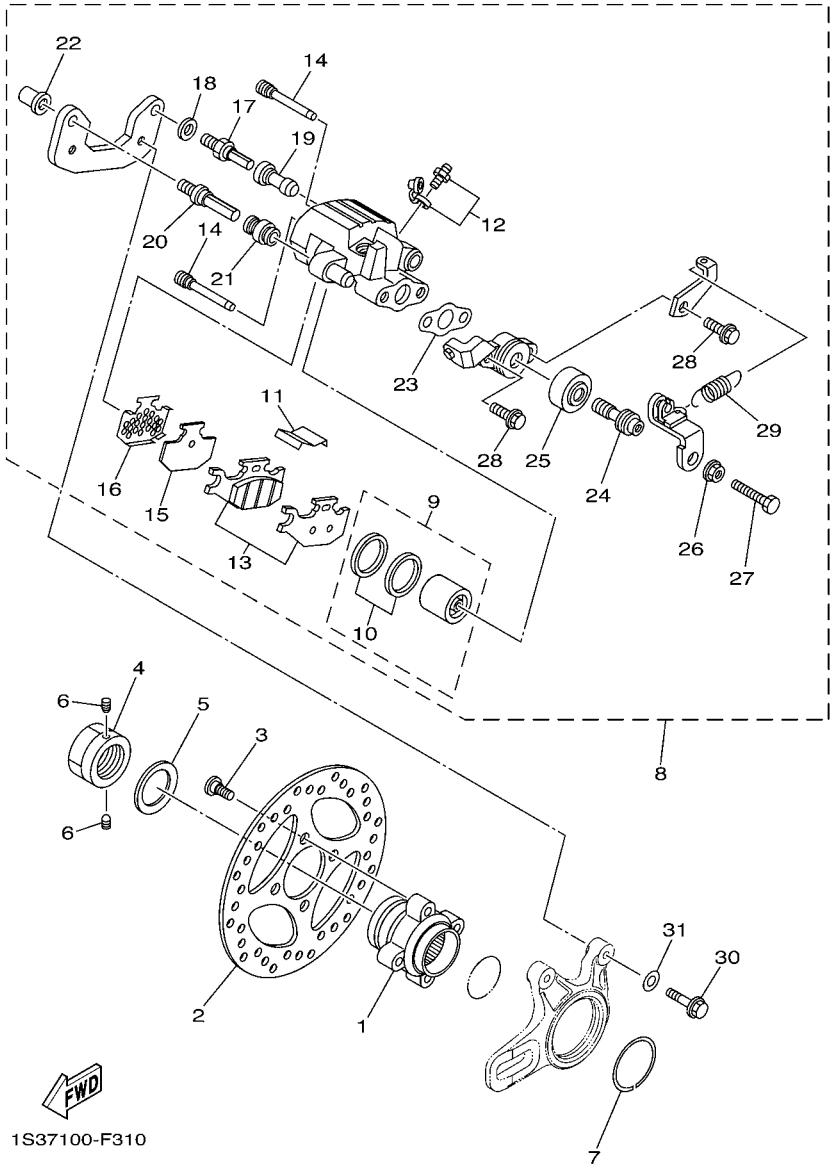

FIG. 31 REAR BRAKE CALIPER

REF. NO.	PART NO.	DESCRIPTION	USA	CAN	EUR	OCE		REMARKS
28	5UG–25833–00	.BOLT, FITTING	2	2	2	2		
29	5TG–25977–50	.SPRING, RETURN	1	1	1	1		
30	90105–08104	BOLT, FLANGE	2	2	2	2		
31	90201–08013	WASHER, PLATE	2	2	2	2		

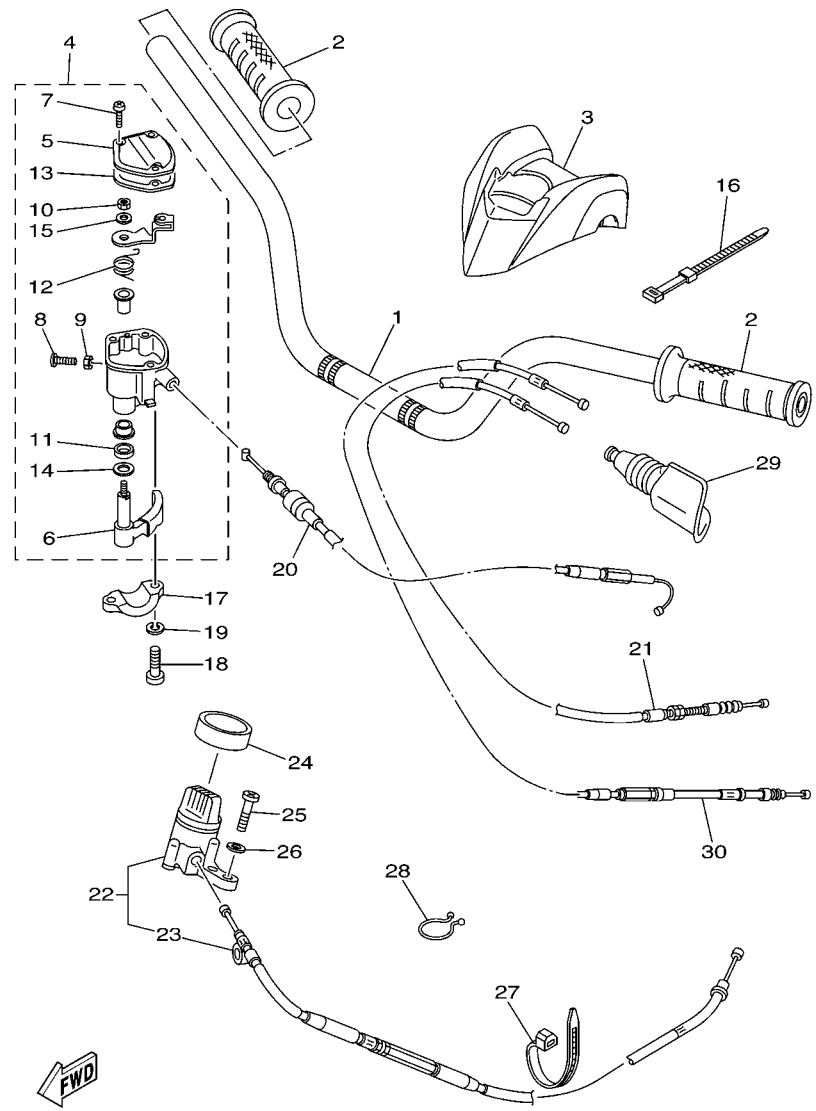

FIG. 32 STEERING HANDLE & CABLE

REF. NO.	PART NO.	DESCRIPTION	USA	CAN	EUR	OCE		REMARKS
1	1S3–26111–00	HANDLEBAR	1	1	1	1		
2	5LP–26241–00	GRIP	2	2	2	2		
3	1S3–26124–00	PROTECTOR, HANDLEBAR	1	1	1	1		
4	4KB–26250–20	THROTTLE LEVER ASSY	1	1	1	1		
5	4KB–2628F–20	.CAP, GEAR	1	1	1	1		
6	1NV–2625G–01	.LEVER, THROTTLE	1	1	1	1		
7	90149–04278	.SCREW	3	3	3	3		
8	98507–05020	.SCREW, PAN HEAD	1	1	1	1		
9	95607–05100	.NUT, U	1	1	1	1		
10	95307–05700	.NUT	1	1	1	1		
11	93104–09025	.OIL SEAL	1	1	1	1		
12	1NV–26304–00	.SPRING	1	1	1	1		
13	4KB–2628G–00	.GASKET	1	1	1	1		
14	1NV–26129–00	.WASHER	1	1	1	1		
15	1NV–26398–00	.WASHER	1	1	1	1		
16	437–83936–01	BAND, SWITCH CORD	4	4	4	4		
17	4V4–82913–00	HOLDER, LEVER LOWER 1	1	1	1	1		
18	98502–05020	SCREW, PAN HEAD	2	2	2	2		
19	92902–05100	WASHER, SPRING	2	2	2	2		
20	1S3–26311–00	CABLE, THROTTLE 1	1	1	1	1		
21	1S3–26335–00	CABLE, CLUTCH	1	1	1	1		
22	1S3–26150–00	REV. LEVER ASSY.	1	1	1	1		
23	1S3–2637E–00	.CABLE, CONTROL 1	1	1	1	1		
24	1S3–26113–00	DAMPER	1	1	1	1		
25	98502–05018	SCREW, PAN HEAD	2	2	2	2		
26	92902–05600	WASHER, PLATE	2	2	2	2		
27	90464–13073	CLAMP	1	1	1	1		

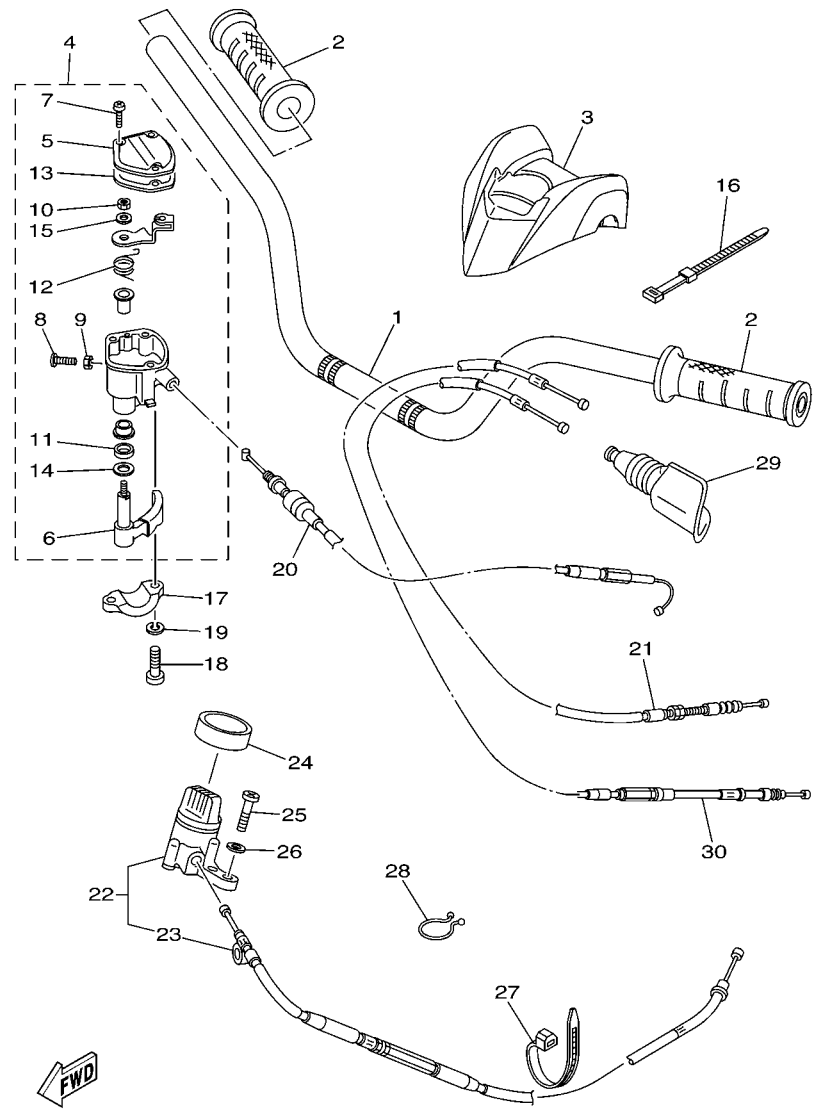

FIG. 32 STEERING HANDLE & CABLE

REF. NO.	PART NO.	DESCRIPTION	USA	CAN	EUR	OCE		REMARKS
28	90464–23041	CLAMP	1	1	1	1		
29	31A–26372–00	COVER, HANDLE LEVER 1	1	1	1	1		
30	1S3–26341–00	WIRE, BRAKE 1	1	1	1	1		

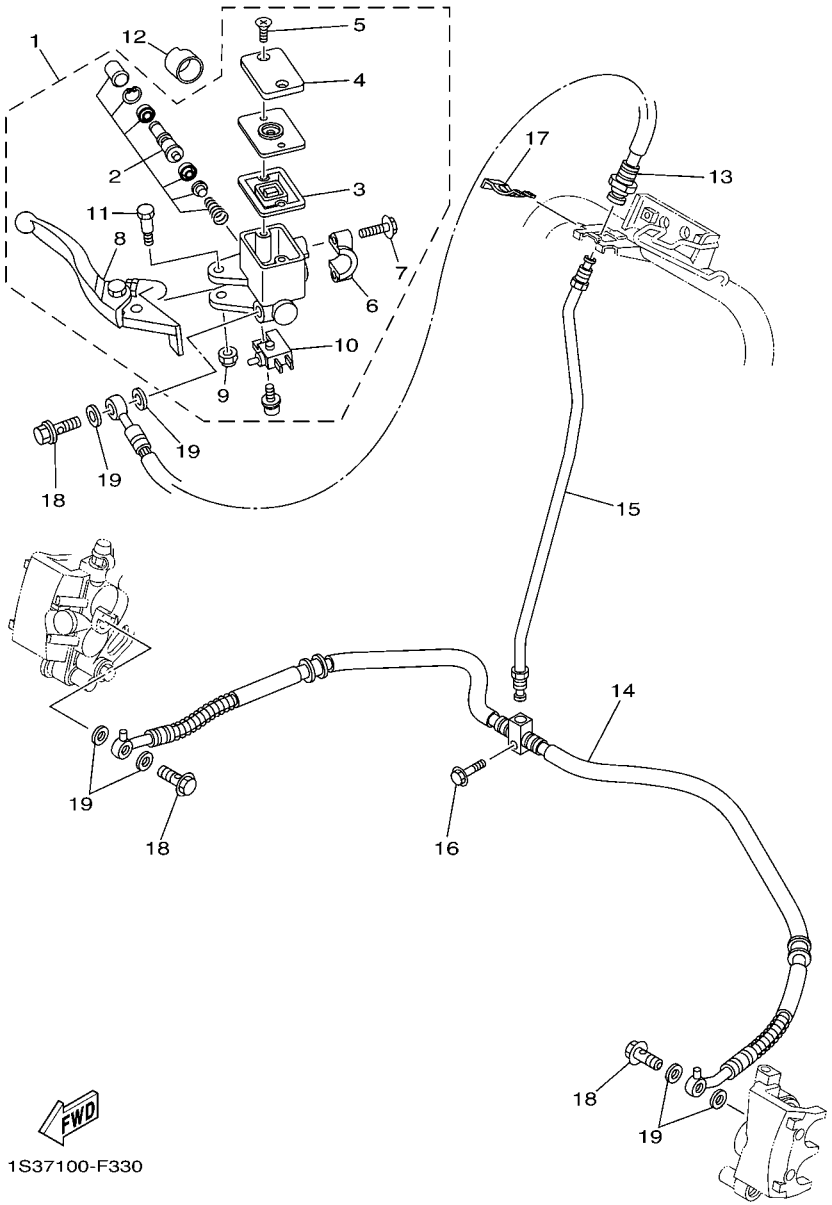

FIG. 33 FRONT MASTER CYLINDER

REF. NO.	PART NO.	DESCRIPTION	USA	CAN	EUR	OCE		REMARKS
1	5D3–2583T–00	MASTER CYLINDER ASSY	1	1	1	1		
2	5D3–W0041–00	.CYLINDER KIT, MASTER	1	1	1	1		
3	4TT–25854–00	.DIAPHRAGM, RESERVOIR	1	1	1	1		
4	5D3–25852–00	.CAP, RESERVOIR	1	1	1	1		
5	4NK–2589H–00	.SCREW	2	2	2	2		
6	5LP–25867–00	.BRACKET, MASTER CYLINDER	1	1	1	1		
7	5MV–25833–00	.BOLT, FITTING	2	2	2	2		
8	5D3–83922–00	.LEVER 2	1	1	1	1		
9	95604–06100	.NUT, U	1	1	1	1		
10	5D3–83980–00	.FRONT STOP SWITCH ASSY	1	1	1	1		
11	3B4–2589F–00	.BOLT, LEVER	1	1	1	1		
12	1UY–26259–00	COLLAR	1	1	1	1		
13	1S3–25872–00	HOSE, BRAKE 1	1	1	1	1		
14	5TG–25873–00	HOSE, BRAKE 2	1	1	1	1		
15	1S3–25871–00	PIPE, BRAKE	1	1	1	1		
16	95827–06025	BOLT, FLANGE	1	1	1	1		
17	2GU–25866–00	CIRCLIP	1	1	1	1		
18	90401–10159	BOLT, UNION	3	3	3	3		
19	90201–10118	WASHER, PLATE	6	6	6	6		

FIG. 34 STAND & FOOTREST

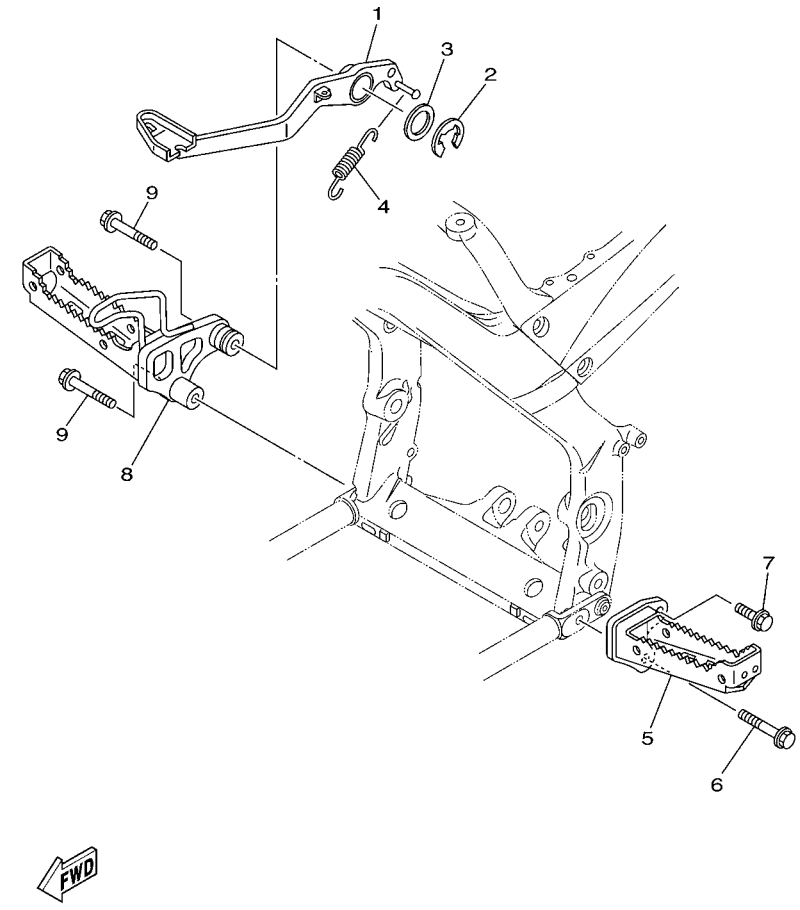

REF. NO.	PART NO.	DESCRIPTION	USA	CAN	EUR	OCE		REMARKS
1	1S3–27211–10	PEDAL, BRAKE	1	1	1	1		
2	93430–23054	CIRCLIP	1	1	1	1		
3	90201–266F6	WASHER, PLATE	1	1	1	1		
4	90506–20380	SPRING, TENSION	1	1	1	1		
5	1S3–27411–00	FOOTREST 1	1	1	1	1		
6	90105–10103	BOLT, FLANGE	1	1	1	1		
7	95817–10030	BOLT, FLANGE	1	1	1	1		
8	1S3–27421–00	FOOTREST 2	1	1	1	1		
9	90105–10103	BOLT, FLANGE	2	2	2	2		

FIG. 35 REAR MASTER CYLINDER

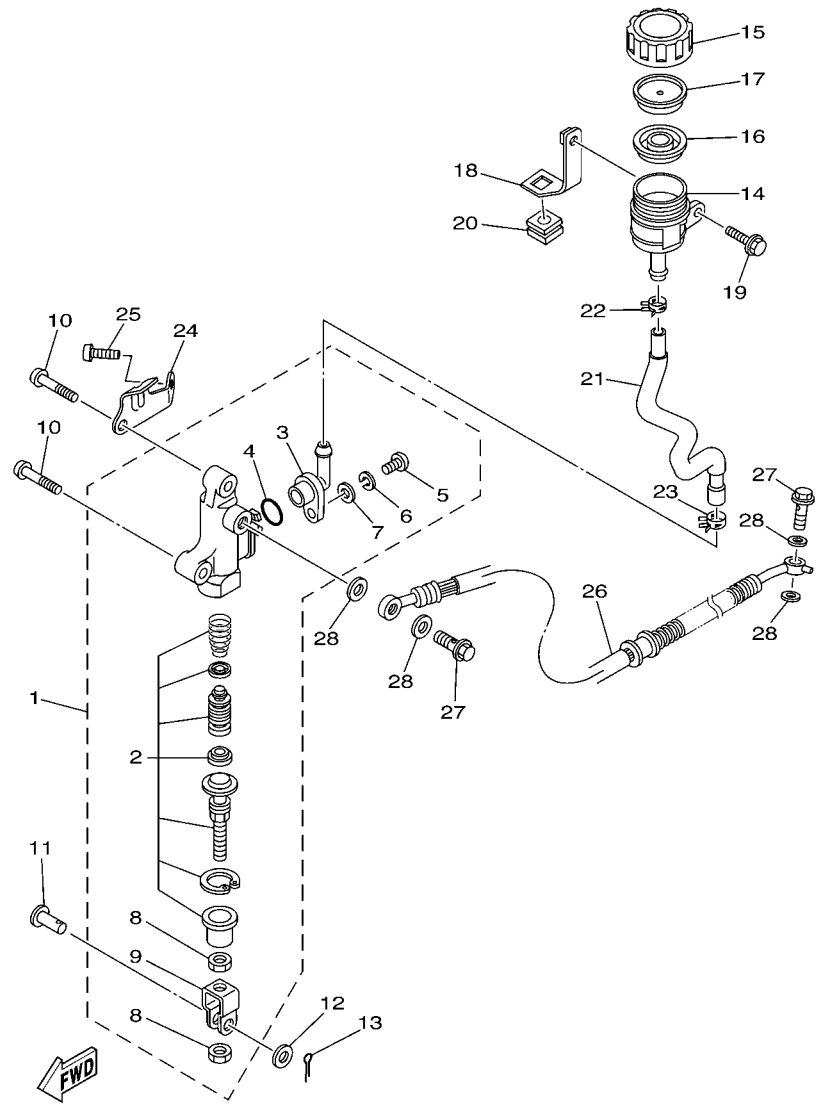

REF. NO.	PART NO.	DESCRIPTION	USA	CAN	EUR	OCE		REMARKS
1	1S3–2580E–00	REAR MASTER CYLINDER ASSY	1	1	1	1		
2	1S3–W0042–50	.CYLINDER KIT, MASTER	1	1	1	1		
3	1AE–2582A–00	.JOINT	1	1	1	1		
4	93210–15620	.O-RING	1	1	1	1		
5	98506–04012	.SCREW, PAN HEAD	1	1	1	1		
6	92906–04100	.WASHER, SPRING	1	1	1	1		
7	92906–04600	.WASHER, PLATE	1	1	1	1		
8	4SS–27218–00	.NUT	2	2	2	2		
9	2YK–27222–00	.JOINT	1	1	1	1		
10	92017–08035	BOLT, BUTTON HEAD	2	2	2	2		
11	90240–08124	PIN, CLEVIS	1	1	1	1		
12	90201–08083	WASHER, PLATE	1	1	1	1		
13	91401–16012	PIN, COTTER	1	1	1	1		
14	5JJ–25894–00	TANK, RESERVOIR	1	1	1	1		
15	3XP–25852–50	CAP, RESERVOIR	1	1	1	1		
16	2VN–25854–00	DIAPHRAGM, RESERVOIR	1	1	1	1		
17	2VN–25855–00	BUSH,DIAPHRAGM	1	1	1	1		
18	1S3–26292–00	STAY	1	1	1	1		
19	90119–06044	BOLT, WITH WASHER	1	1	1	1		
20	90480–15009	GROMMET	1	1	1	1		
21	1S3–25895–00	HOSE, RESERVOIR	1	1	1	1		
22	90467–11044	CLIP	1	1	1	1		
23	90467–14057	CLIP	1	1	1	1		
24	1S3–27453–00	COVER 1	1	1	1	1		
25	92017–08016	BOLT, BUTTON HEAD	1	1	1	1		
26	1S3–25874–00	HOSE, BRAKE	1	1	1	1		
27	90401–10159	BOLT, UNION	2	2	2	2		

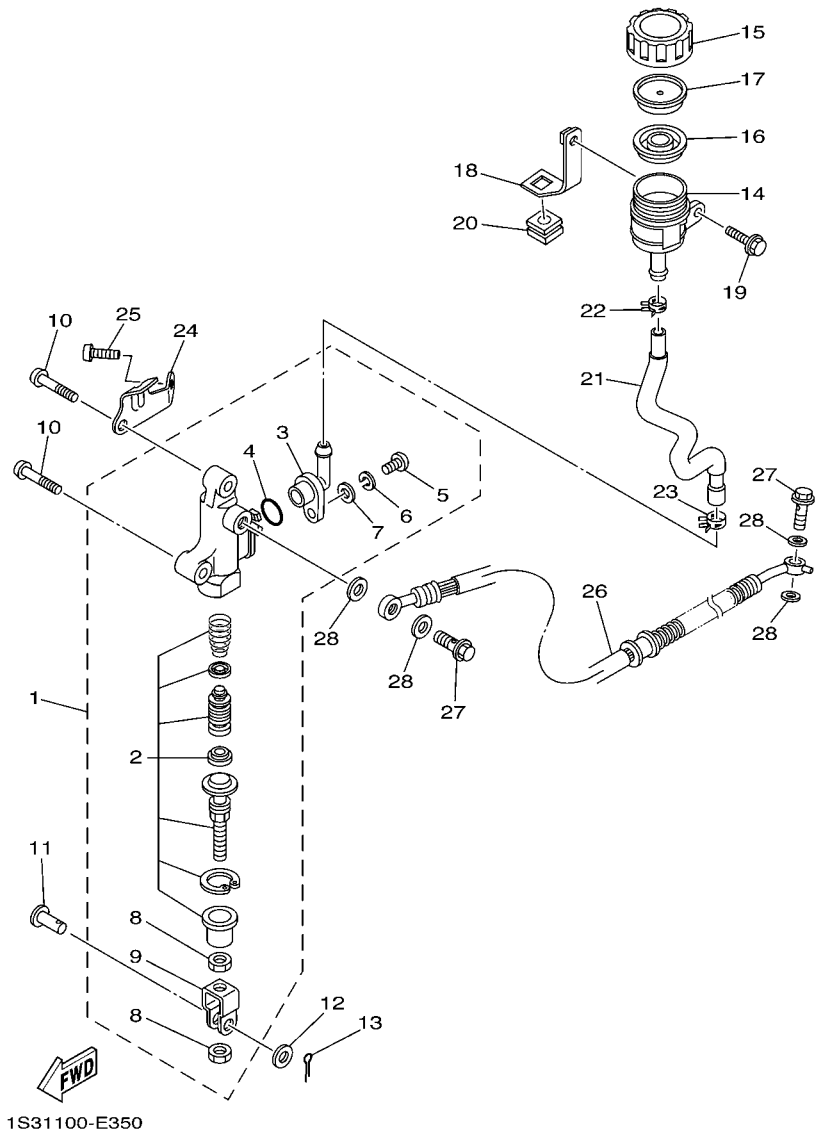

FIG. 35 REAR MASTER CYLINDER

REF. NO.	PART NO.	DESCRIPTION	USA	CAN	EUR	OCE		REMARKS
28	90201–10118	WASHER, PLATE	4	4	4	4		

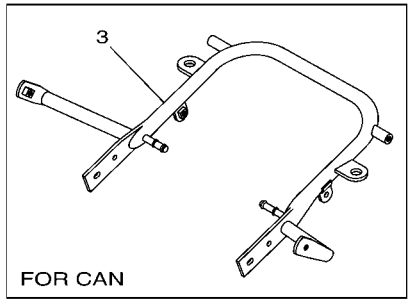

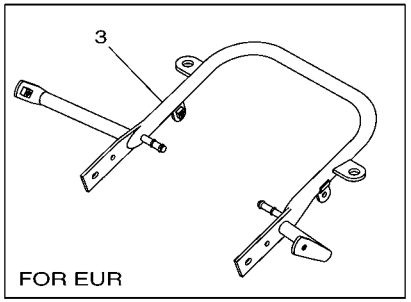

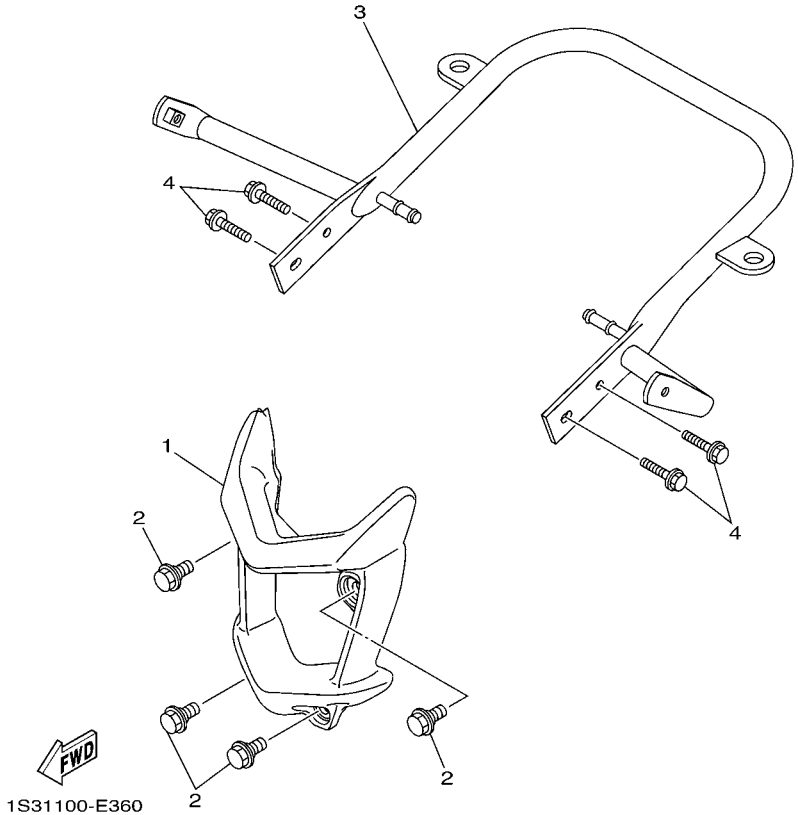

FIG. 36 GUARD

REF. NO.	PART NO.	DESCRIPTION	USA	CAN	EUR	OCE		REMARKS
1	1S3–2845N–00	BAR, CARRY FRONT	1	1	1	1		
2	90109–08100	BOLT	4	4	4	4		
3	1S3–2845R–00	BAR, CARRY REAR	1			1		
	1S3–2845R–10	BAR, CARRY REAR		1				
	1S3–2845R–20	BAR, CARRY REAR			1			
4	90105–08142	BOLT, FLANGE	4	4	4	4		

FIG. 37 GENERATOR

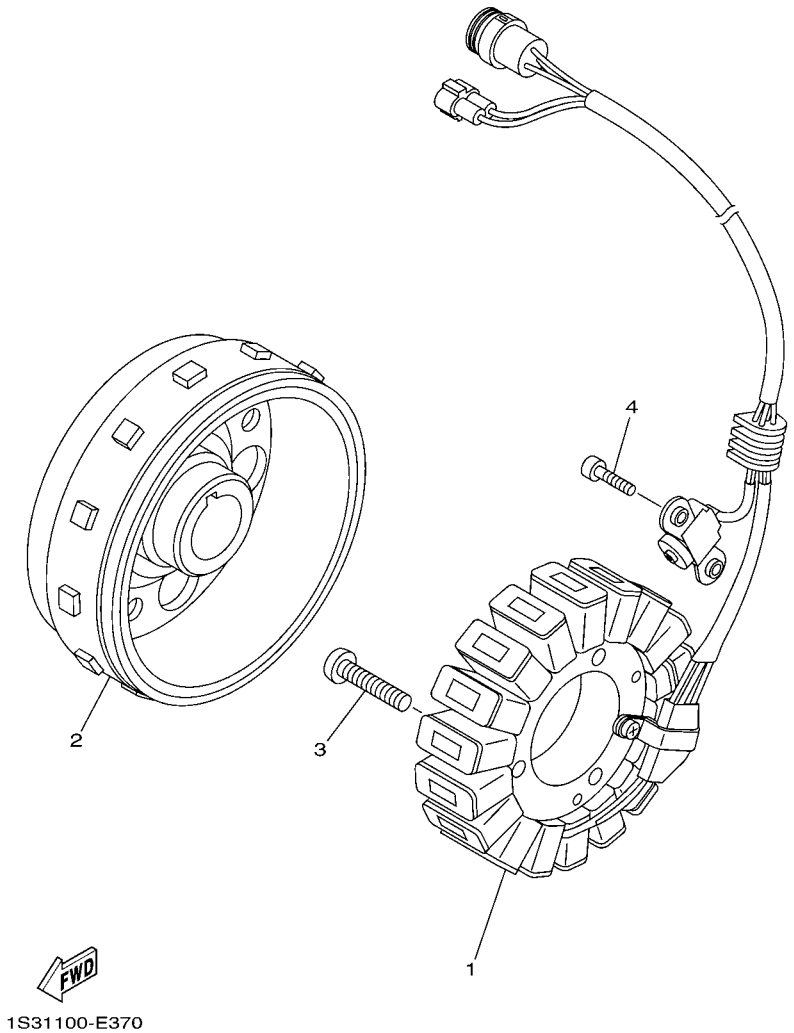

REF. NO.	PART NO.	DESCRIPTION	USA	CAN	EUR	OCE		REMARKS
1	1S3–81410–00	STATOR ASSY	1	1	1	1		
2	1S3–81450–00	ROTOR ASSY	1	1	1	1		
3	92012–06030	BOLT, BUTTON HEAD	3	3	3	3		
4	90110–05031	BOLT, HEXAGON SOCKET HEAD	2	2	2	2		

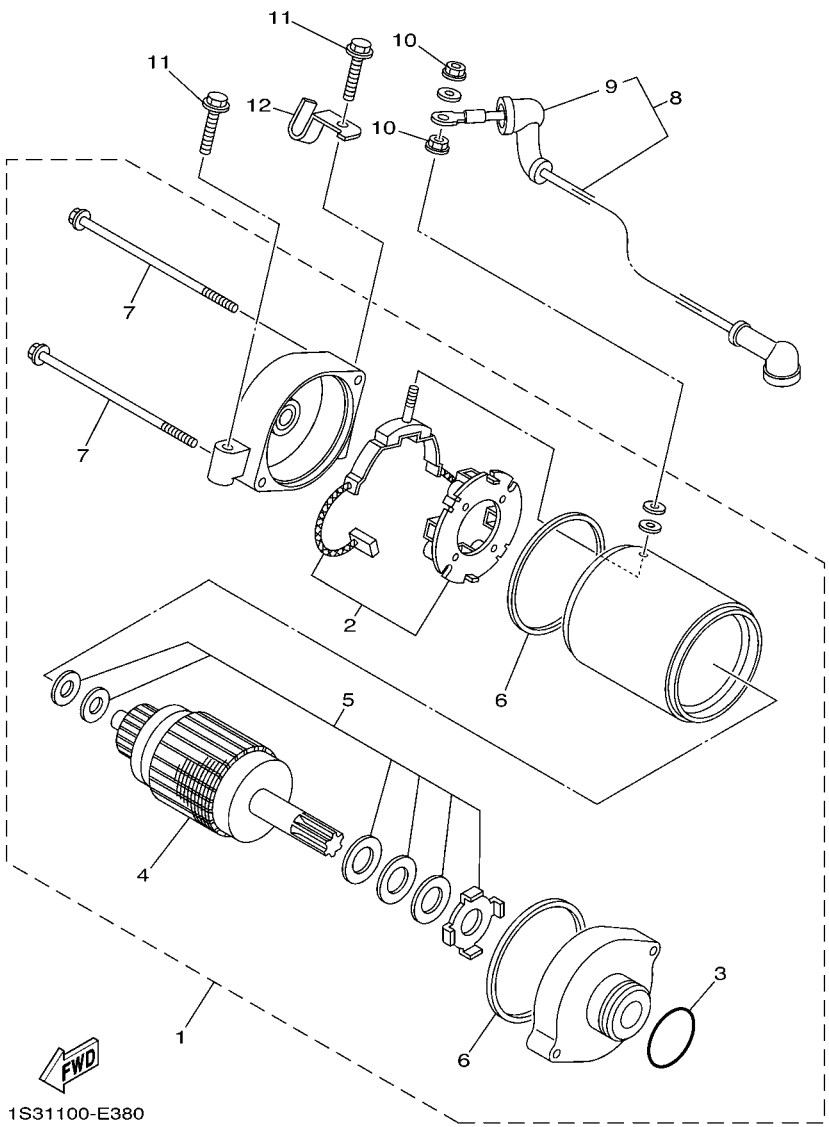

FIG. 38 STARTING MOTOR

REF. NO.	PART NO.	DESCRIPTION	USA	CAN	EUR	OCE		REMARKS
1	1S3–81890–00	MOTOR ASSY	1	1	1	1		
2	3AJ–81801–00	.BRUSH SET	1	1	1	1		
3	1FK–81847–00	.O-RING	1	1	1	1		
4	4NK–81850–00	.ARMATURE ASSY	1	1	1	1		
5	3KS–81809–00	.WASHER KIT	1	1	1	1		
6	11H–81844–00	.GASKET	2	2	2	2		
7	3AJ–81826–00	.BOLT	2	2	2	2		
8	1S3–81815–00	CORD, STARTER MOTOR	1	1	1	1		
9	4G0–81871–00	.CAP	1	1	1	1		
10	4XV–8182A–00	NUT	2	2	2	2		
11	95812–06030	BOLT, FLANGE	2	2	2	2		
12	1S3–15484–00	CLAMP 2	1	1	1	1		

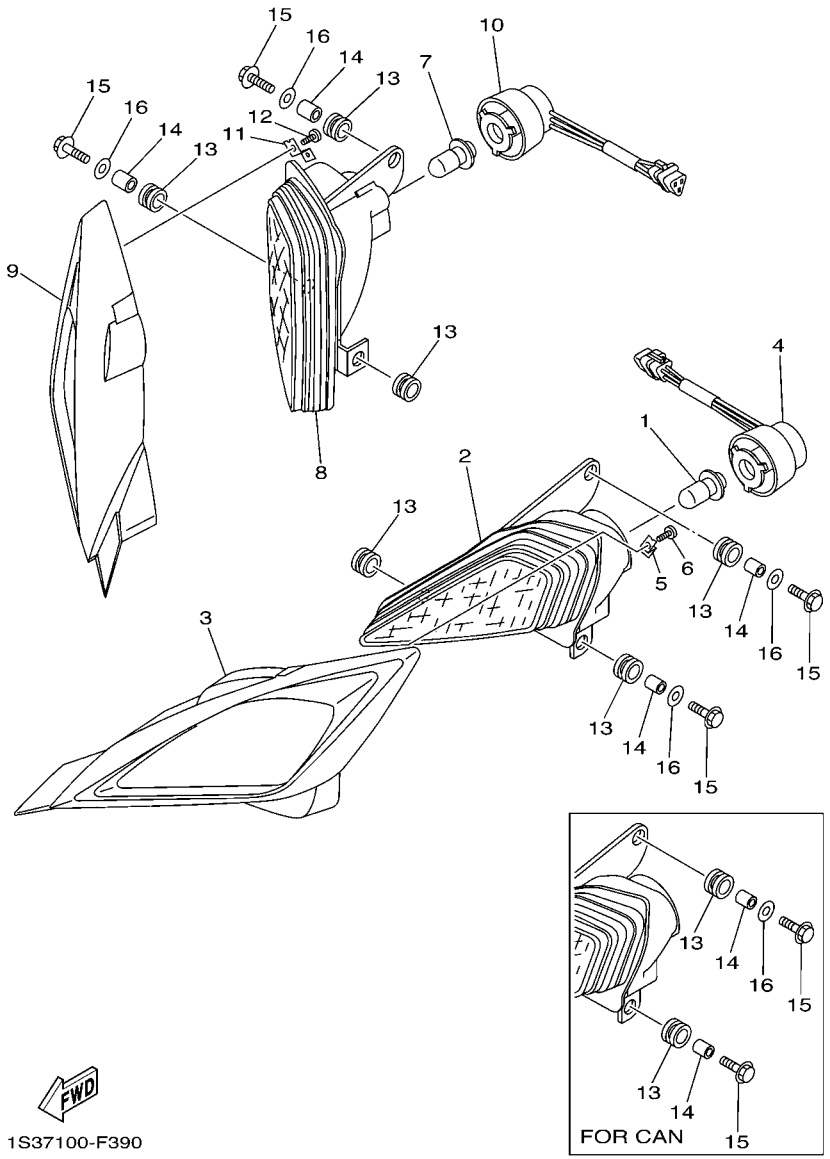

FIG. 39 HEADLIGHT

REF. NO.	PART NO.	DESCRIPTION	USA	CAN	EUR	OCE		REMARKS
1	4KB–84314–01	BULB (12V-30/30W)	1	1	1	1		
2	5TG–84110–12	HEADLIGHT UNIT ASSY	1	1	1	1		
3	1S3–84165–00	RIM, HEADLIGHT COVER 1	1	1	1	1		
4	5TG–84140–01	SOCKET CORD ASSY	1	1	1	1		
5	1S3–8413J–00	PLATE, FITTING	1	1	1	1		
6	97707–30510	SCREW, TAPPING	1	1	1	1		
7	4KB–84314–01	BULB (12V-30/30W)	1	1	1	1		
8	5TG–84310–12	HEADLIGHT UNIT ASSY	1	1	1	1		
9	1S3–84166–00	RIM, HEADLIGHT COVER 2	1	1	1	1		
10	5TG–84340–01	SOCKET CORD ASSY 1	1	1	1	1		
11	1S3–8413J–00	PLATE, FITTING	1	1	1	1		
12	97707–30510	SCREW, TAPPING	1	1	1	1		
13	90480–14102	GROMMET	6	6	6	6		
14	90387–07598	COLLAR	4	4	4	4		
15	95812–06030	BOLT, FLANGE	4	4	4	4		
16	90201–06078	WASHER, PLATE	4	2	4	4		

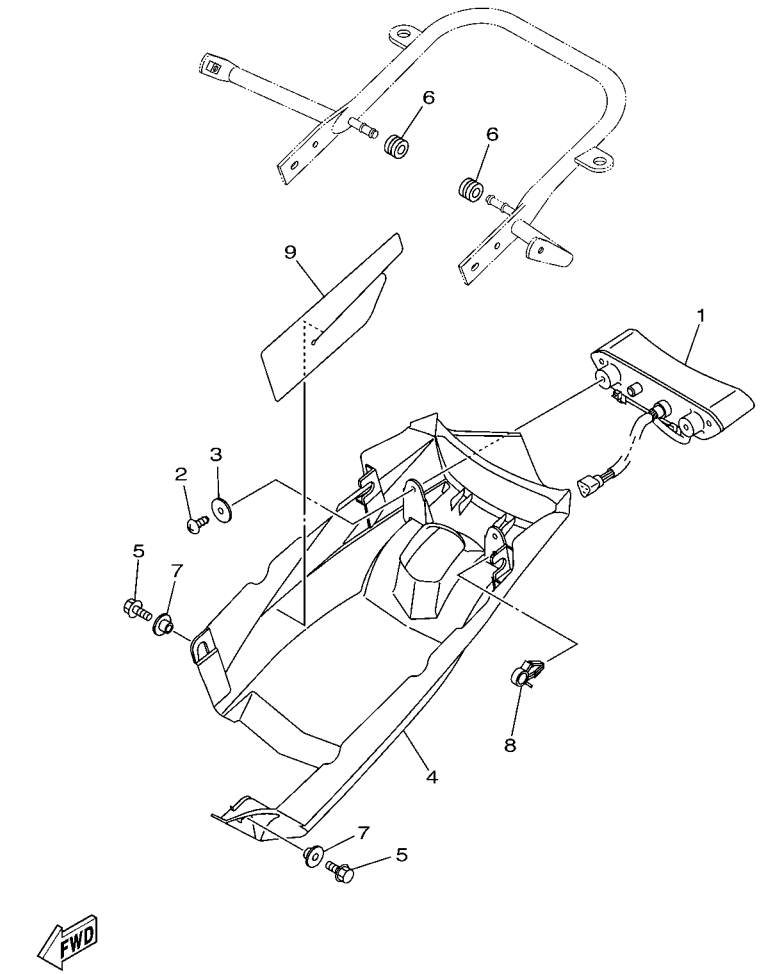

FIG. 40 TAILLIGHT

REF. NO.	PART NO.	DESCRIPTION	USA	CAN	EUR	OCE		REMARKS
1	1S3–84710–00	TAILLIGHT UNIT ASSY	1			1		
2	97702–50016	SCREW, TAPPING	2			2		
3	90201–05025	WASHER, PLATE	2			2		
4	1S3–84716–10	COVER, TAILLIGHT	1			1		
5	95802–06010	BOLT, FLANGE	2			2		
6	90480–14101	GROMMET	2			2		
7	90387–06153	COLLAR	2			2		
8	90464–15157	CLAMP	1			1		
9	1S3–84736–00	DAMPER, TAIL 1	1			1		

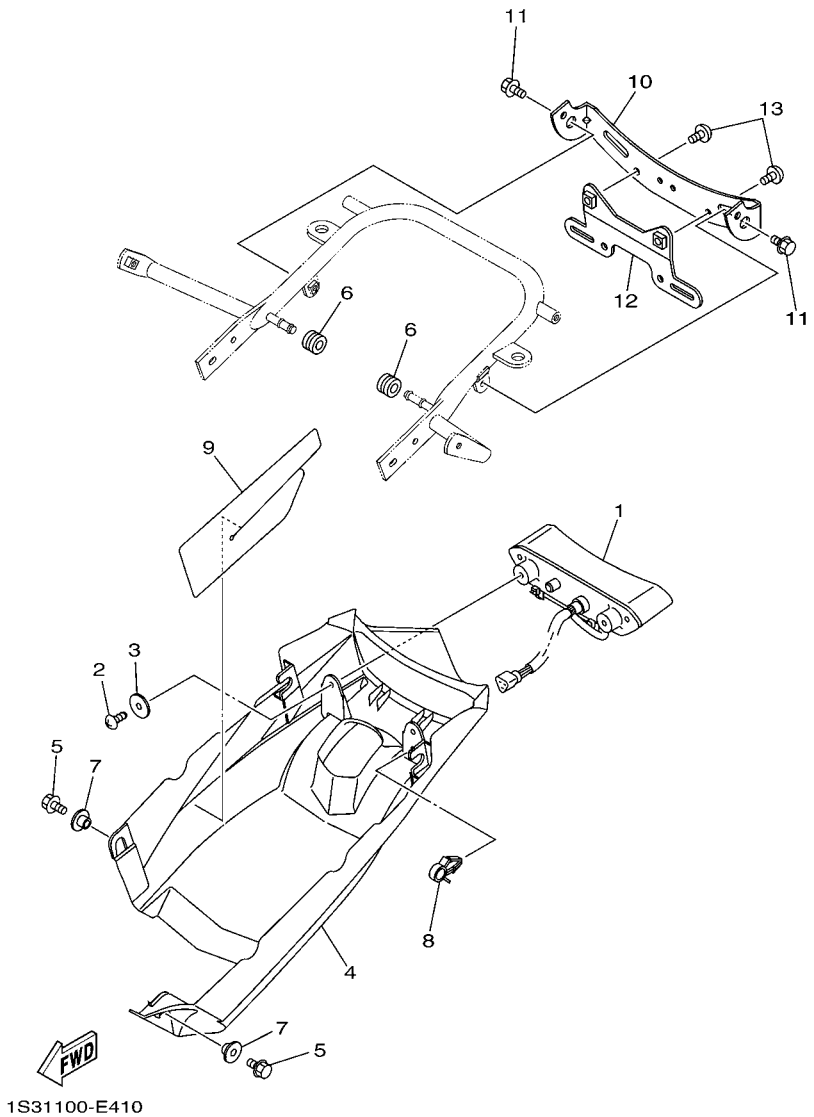

FIG. 41 TAILLIGHT 2

REF. NO.	PART NO.	DESCRIPTION	USA	CAN	EUR	OCE		REMARKS
1	1S3–84710–00	TAILLIGHT UNIT ASSY		1	1			
2	97702–50016	SCREW, TAPPING		2	2			
3	90201–05025	WASHER, PLATE		2	2			
4	1S3–84716–10	COVER, TAILLIGHT		1	1			
5	95802–06010	BOLT, FLANGE		2	2			
6	90480–14101	GROMMET		2	2			
7	90387–06153	COLLAR		2	2			
8	90464–15157	CLAMP		1	1			
9	1S3–84736–00	DAMPER, TAIL 1		1	1			
10	1S3–84703–00	BRACKET		1	1			
11	95802–06010	BOLT, FLANGE		2	2			
12	1S3–84751–00	BRACKET, LICENSE		1				
13	92012–06010	BOLT, BUTTON HEAD		2				

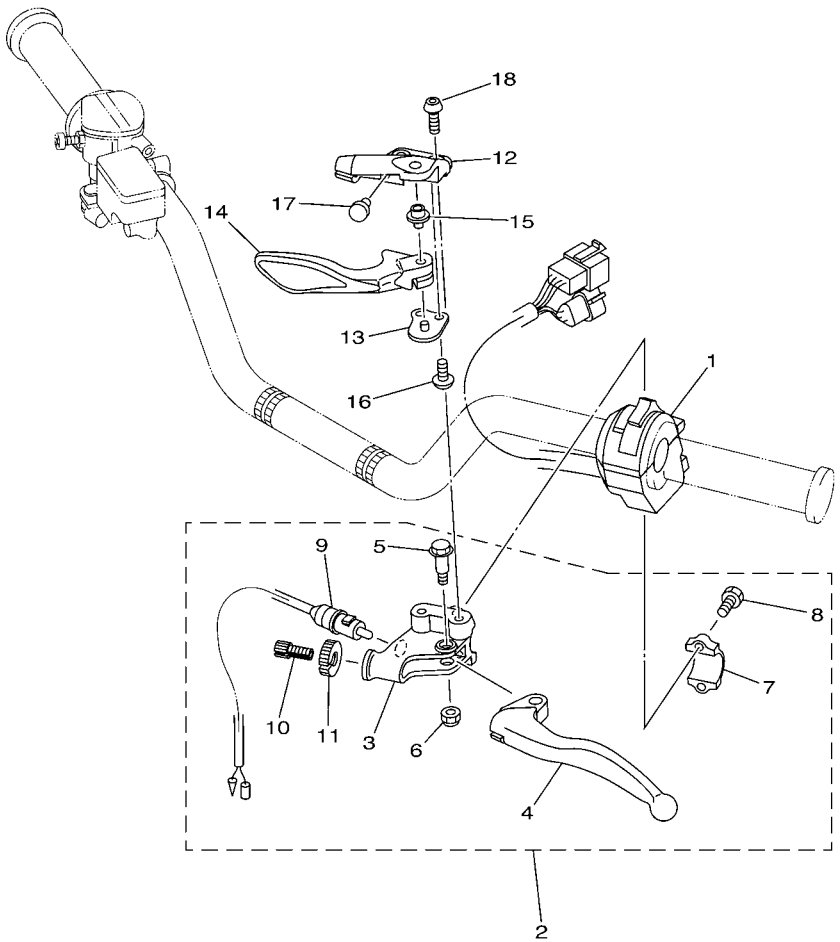

1S31100-E420

FIG. 42 HANDLE SWITCH & LEVER

REF. NO.	PART NO.	DESCRIPTION	USA	CAN	EUR	OCE		REMARKS
1	1S3–83973–00	SWITCH, HANDLE 3	1	1	1	1		
2	5YT–82910–00	LEVER HOLDER ASSY (LEFT)	1	1	1	1		
3	5YT–82911–00	.HOLDER, LEVER 1	1	1	1	1		
4	2HT–83912–00	.LEVER 1	1	1	1	1		
5	90109–06798	.BOLT	1	1	1	1		
6	95602–06100	.NUT, U	1	1	1	1		
7	5TG–82913–00	.HOLDER, LEVER LOWER 1	1	1	1	1		
8	97002–05016	.BOLT	2	2	2	2		
9	5KM–82917–00	.SWITCH	1	1	1	1		
10	90123–08046	.BOLT	1	1	1	1		
11	90179–08148	.NUT	1	1	1	1		
12	1S3–25727–00	BRACKET, LEVER	1	1	1	1		
13	5D3–25689–00	PLATE, GUIDE	1	1	1	1		
14	1S3–25726–00	LEVER, BRAKE	1	1	1	1		
15	5TG–83923–00	COLLAR, LEVER 2	1	1	1	1		
16	92012–06012	BOLT, BUTTON HEAD	2	2	2	2		
17	90338–07007	PLUG	1	1	1	1		
18	92014–06016	BOLT, BUTTON HEAD	2	2	2	2		

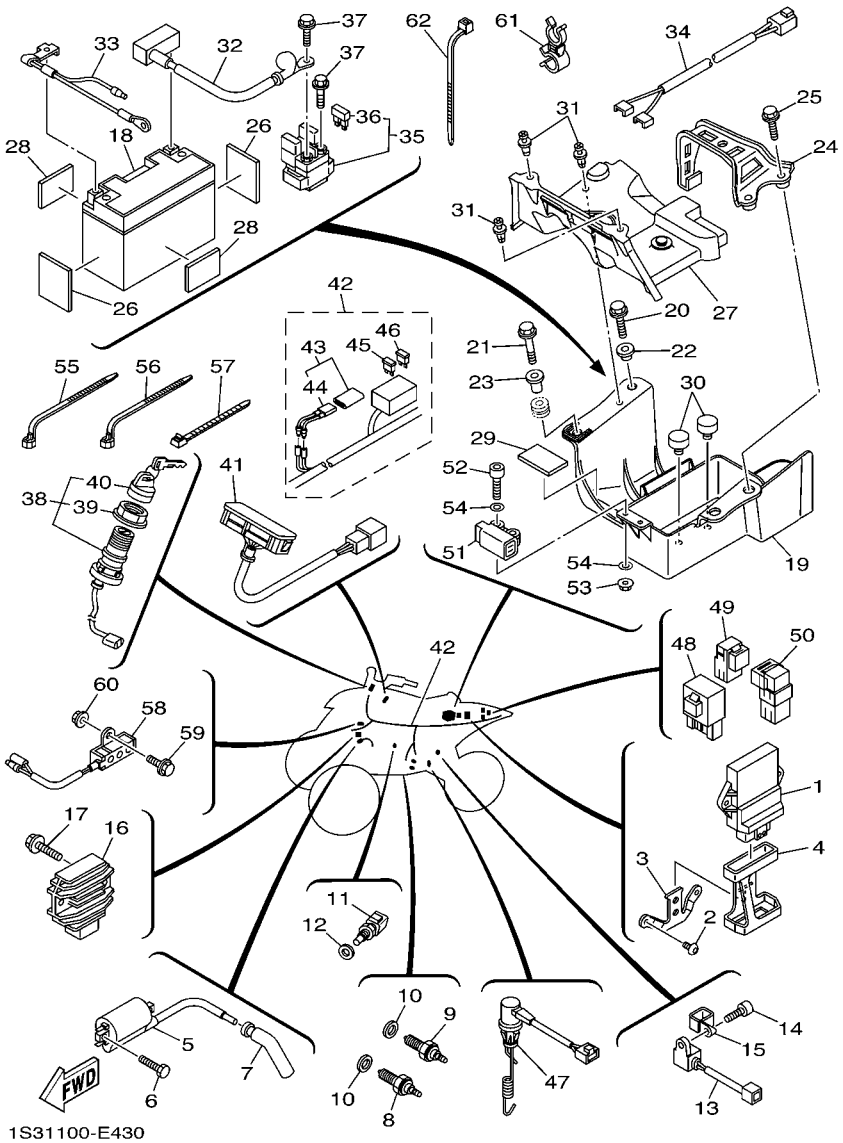

FIG. 43 ELECTRICAL 1

REF. NO.	PART NO.	DESCRIPTION	USA	CAN	EUR	OCE		REMARKS
1	1S3–8591A–00	ENGINE CONTROL UNIT ASSY	1	1	1	1		
2	92012–06010	BOLT, BUTTON HEAD	2	2	2	2		
3	1S3–21274–00	BRACKET, C.D.I. UNIT	1	1	1	1		
4	1S3–85546–00	BAND	1	1	1	1		
5	3TB–82310–00	IGNITION COIL ASSY	1	1	1	1		
6	97002–05020	BOLT	2	2	2	2		
7	5VK–82370–00	PLUG CAP ASSY	1	1	1	1		
8	5LP–82540–01	NEUTRAL SWITCH ASSY	1	1	1	1		
9	3GB–82540–01	NEUTRAL SWITCH ASSY	1	1	1	1		
10	90430–10148	GASKET	2	2	2	2		
11	5PS–85790–00	THERMOSENSOR ASSY	1	1	1	1		
12	90430–12202	GASKET	1	1	1	1		
13	1S3–83755–00	SENSOR, SPEED	1	1	1	1		
14	91312–06016	BOLT	1	1	1	1		
15	90461–10004	CLAMP	1	1	1	1		
16	5BN–81960–00	RECTIFIER & REGULATOR ASSY	1	1	1	1		
17	95802–06025	BOLT, FLANGE	2	2	2	2		
18	5GJ–82100–01	BATTERY ASSY (GS GT9B-4)	1	1	1	1		
19	1S3–8212B–00	BOX, BATTERY 1	1	1	1	1		
20	90105–06084	BOLT, FLANGE	1	1	1	1		
21	95802–06030	BOLT, FLANGE	1	1	1	1		
22	90387–06153	COLLAR	1	1	1	1		
23	90387–06168	COLLAR	1	1	1	1		
24	1S3–82128–00	BRACKET, BATTERY	1	1	1	1		
25	95802–06020	BOLT, FLANGE	2	2	2	2		
26	1S3–82123–00	SEAT, BATTERY	2	2	2	2		
27	1S3–82129–00	COVER, BATTERY	1	1	1	1		

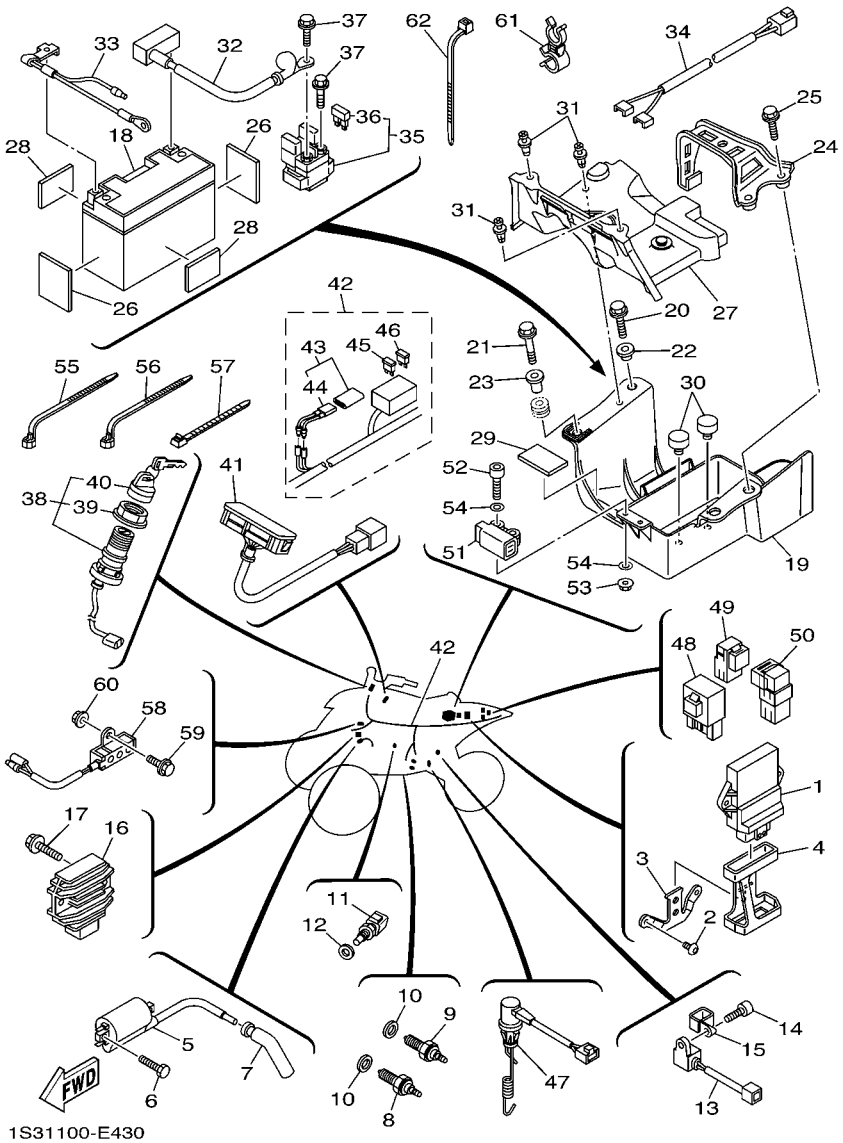

FIG. 43 ELECTRICAL 1

REF. NO.	PART NO.	DESCRIPTION	USA	CAN	EUR	OCE		REMARKS
28	1S3–82122–00	SEAT, BATTERY	2	2	2	2		
29	22F–2139X–00	DAMPER	1	1	1	1		
30	5TG–82121–10	PAD, BATTERY	2	2	2	2		
31	90269–06002	RIVET	3	3	3	3		
32	1S3–82115–00	WIRE, PLUS LEAD	1	1	1	1		
33	1S3–82116–10	WIRE, MINUS LEAD	1	1	1	1		
34	1S3–82541–00	WIRE, LEAD	1	1	1	1		
35	1S3–81940–00	STARTER RELAY ASSY	1	1	1	1		
36	2GH–82151–00	.FUSE (20A-BL)	2	2	2	2		
37	95022–06008	BOLT, FLANGE	2	2	2	2		
38	5LP–82510–00	MAIN SWITCH ASSY	1	1	1	1		
39	3HN–82569–00	.NUT, MAIN SWITCH	1	1	1	1		
40	3HN–82579–00	.CAP, KEY	1	1	1	1		
41	1S3–83530–00	PILOT LIGHT ASSY	1	1	1	1		
42	1S3–82590–10	WIRE HARNESS ASSY	1	1	1	1		
43	5GT–82180–00	.CIRCUIT BREAKER ASSY	1	1	1	1		
44	5GT–82560–00	..THERMO SWITCH ASSY	1	1	1	1		
45	5JJ–82151–10	.FUSE (15A-BL)	2	2	2	2		
46	5JJ–82151–30	.FUSE (10A-BL)	4	4	4	4		
47	1S3–82530–00	STOP SWITCH ASSY	1	1	1	1		
48	5VK–81950–30	RELAY ASSY	1	1	1	1		
49	5EA–81950–20	RELAY ASSY	1	1	1	1		
50	5DM–81950–00	RELAY ASSY	1	1	1	1		
51	5PS–82576–01	LEAN ANGLE SENSOR	1	1	1	1		
52	91312–04025	BOLT	2	2	2	2		
53	95702–04500	NUT, FLANGE	2	2	2	2		
54	90201–04030	WASHER, PLATE	4	4	4	4		

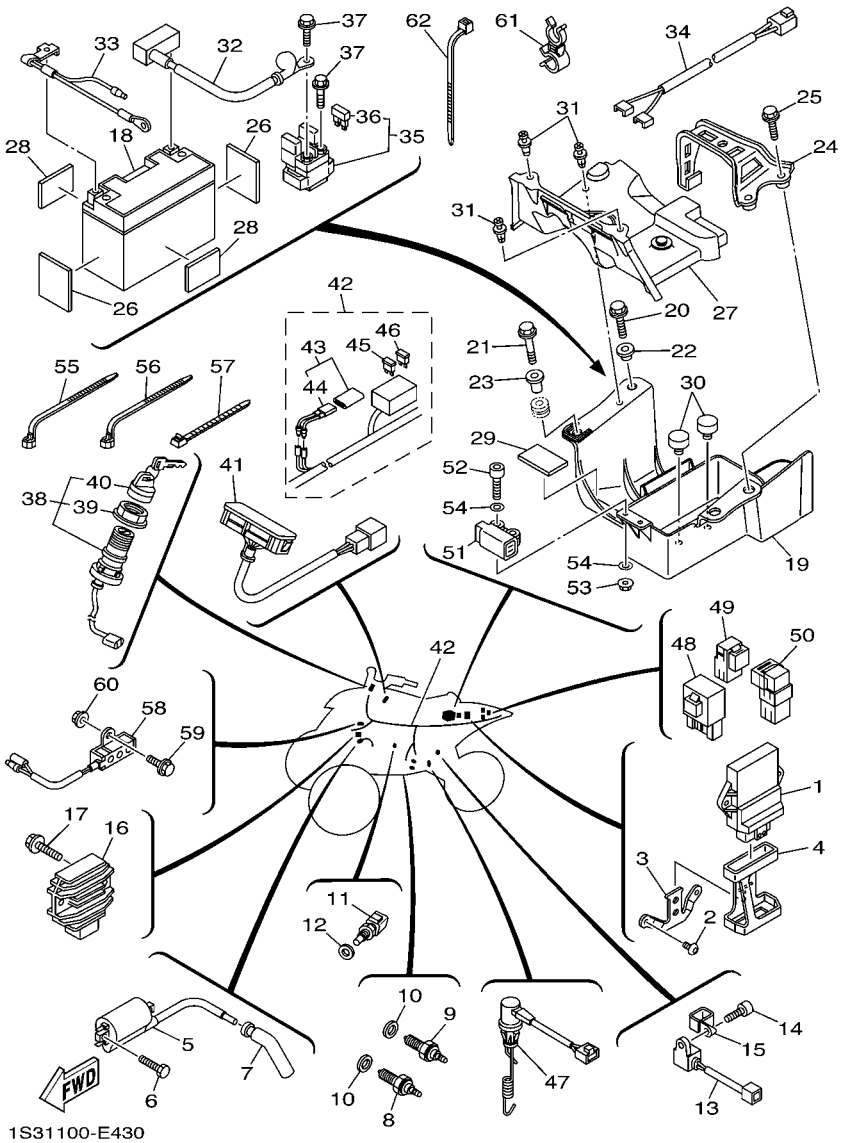

FIG. 43 ELECTRICAL 1

REF. NO.	PART NO.	DESCRIPTION	USA	CAN	EUR	OCE		REMARKS
55	90464–13077	CLAMP	1	1	1	1		
56	90464–15195	CLAMP	1	1	1	1		
57	90465–13M11	CLAMP	2	2	2	2		
58	1S3–85370–00	RESISTOR ASSY	1	1	1	1		
59	95802–06016	BOLT, FLANGE	1	1	1	1		
60	95702–06500	NUT, FLANGE	1	1	1	1		
61	90464–16013	CLAMP	1	1	1	1		
62	90465–10098	CLAMP	1	1	1	1		

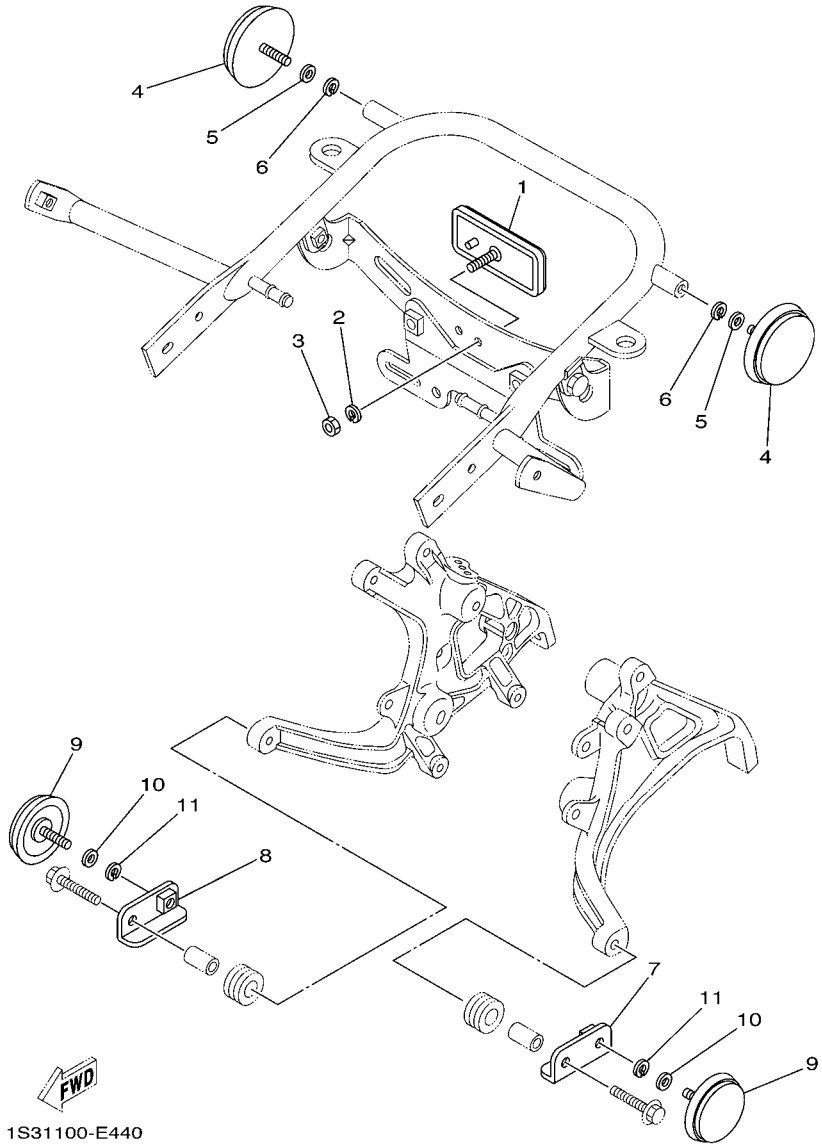

FIG. 44 ELECTRICAL 2

REF. NO.	PART NO.	DESCRIPTION	USA	CAN	EUR	OCE		REMARKS
1	3Y6–85130–02	REAR REFLECTOR ASSY		1	1			
2	92902–05100	WASHER, SPRING		1	1			
3	95302–05600	NUT		1	1			
4	449–85131–02	REFLECTOR, REAR 1		2				
5	92902–05200	WASHER		2				
6	92902–05100	WASHER, SPRING		2				
7	1S3–85112–00	BRACKET, REFLECTOR 1		1				
8	1S3–85122–00	BRACKET, REFLECTOR 2		1				
9	2EK–85111–00	REFLECTOR, FRONT 1		2				
10	92902–05200	WASHER		2				
11	92902–05100	WASHER, SPRING		2				

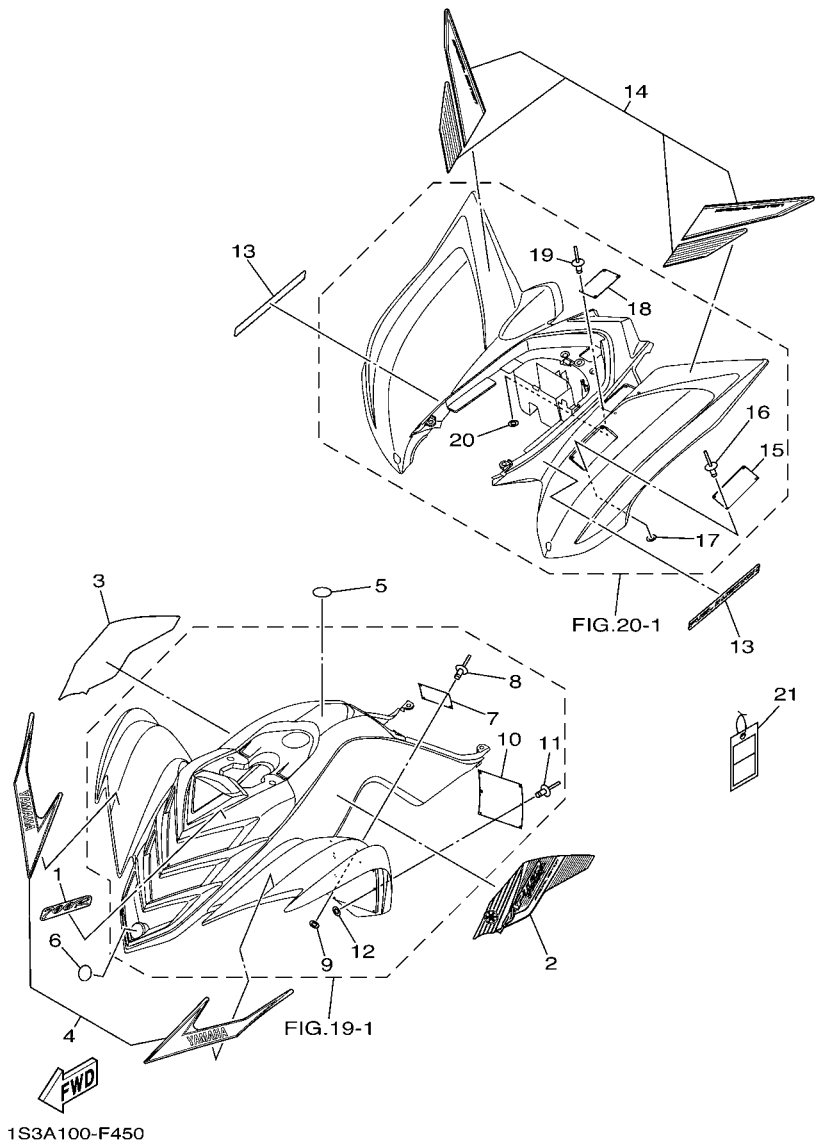

FIG. 45 EMBLEM & LABEL 1

REF. NO.	PART NO.	DESCRIPTION	USA	CAN	EUR	OCE		REMARKS
1	1S3–21565–40	EMBLEM, 2	1					
2	1S3–21569–30	GRAPHIC 1	1					
3	1S3–21579–30	GRAPHIC 2	1					
4	1S3–2157A–10	GRAPHIC SET, FRONT FENDER	1					
5	5D3–2164B–00	EMBLEM,3D	1					
6	5KM–2175B–00	TUNING FORK MARK	1					
7	5FE–21697–01	LABEL, CAUTION 2	1					ENGLISH
8	90267–32004	RIVET, BLIND	4					
9	90201–03008	WASHER, PLATE	4					
10	5FE–21568–01	LABEL, WARNING	1					ENGLISH
11	90267–32004	RIVET, BLIND	6					
12	90201–03008	WASHER, PLATE	6					
13	1S3–2163G–10	EMBLEM 1	2					
14	1S3–2165A–60	GRAPHIC SET,REAR FENDER	1					
15	5LP–21696–00	LABEL, CAUTION	1					EINGLISH
16	90267–32004	RIVET, BLIND	4					
17	90201–03008	WASHER, PLATE	4					
18	5FE–2151H–01	LABEL 5	1					ENGLISH
19	90267–32004	RIVET, BLIND	4					
20	90201–03008	WASHER, PLATE	4					
21	5LP–2819R–00	TAG, WARNING	1					

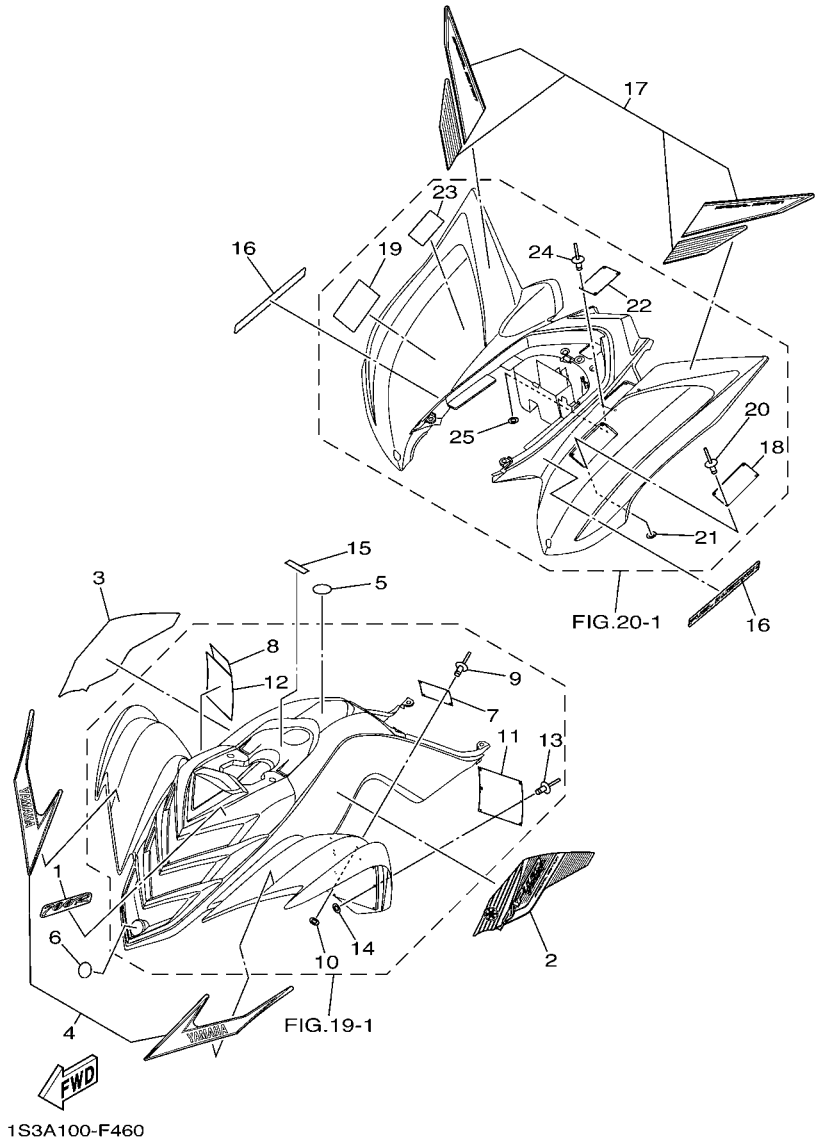

FIG. 46 EMBLEM & LABEL 2

REF. NO.	PART NO.	DESCRIPTION	USA	CAN	EUR	OCE		REMARKS
1	1S3–21565–40	EMBLEM, 2		1				
2	1S3–21569–30	GRAPHIC 1		1				
3	1S3–21579–30	GRAPHIC 2		1				
4	1S3–2157A–10	GRAPHIC SET, FRONT FENDER		1				
5	5D3–2164B–00	EMBLEM,3D		1				
6	5KM–2175B–00	TUNING FORK MARK		1				
7	5FE–21697–01	LABEL, CAUTION 2		1				ENGLISH
8	3JM–21697–10	LABEL, CAUTION 2		1				FRENCH
9	90267–32004	RIVET, BLIND		4				
10	90201–03008	WASHER, PLATE		4				
11	5FE–21568–01	LABEL, WARNING		1				ENGLISH
12	4WU–21568–10	LABEL, WARNING		1				FRENCH
13	90267–32004	RIVET, BLIND		6				
14	90201–03008	WASHER, PLATE		6				
15	4SH–2416E–00	LABEL, CAUTION CANADA		1				ENGLISH
16	1S3–2163G–10	EMBLEM 1		2				
17	1S3–2165A–60	GRAPHIC SET,REAR FENDER		1				
18	5LP–21696–00	LABEL, CAUTION		1				EINGLISH
19	5LP–21696–B0	LABEL, CAUTION		1				FRENCH
20	90267–32004	RIVET, BLIND		4				
21	90201–03008	WASHER, PLATE		4				
22	5FE–2151H–01	LABEL 5		1				ENGLISH
23	4WU–2151H–10	LABEL 5		1				FRENCH
24	90267–32004	RIVET, BLIND		4				
25	90201–03008	WASHER, PLATE		4				

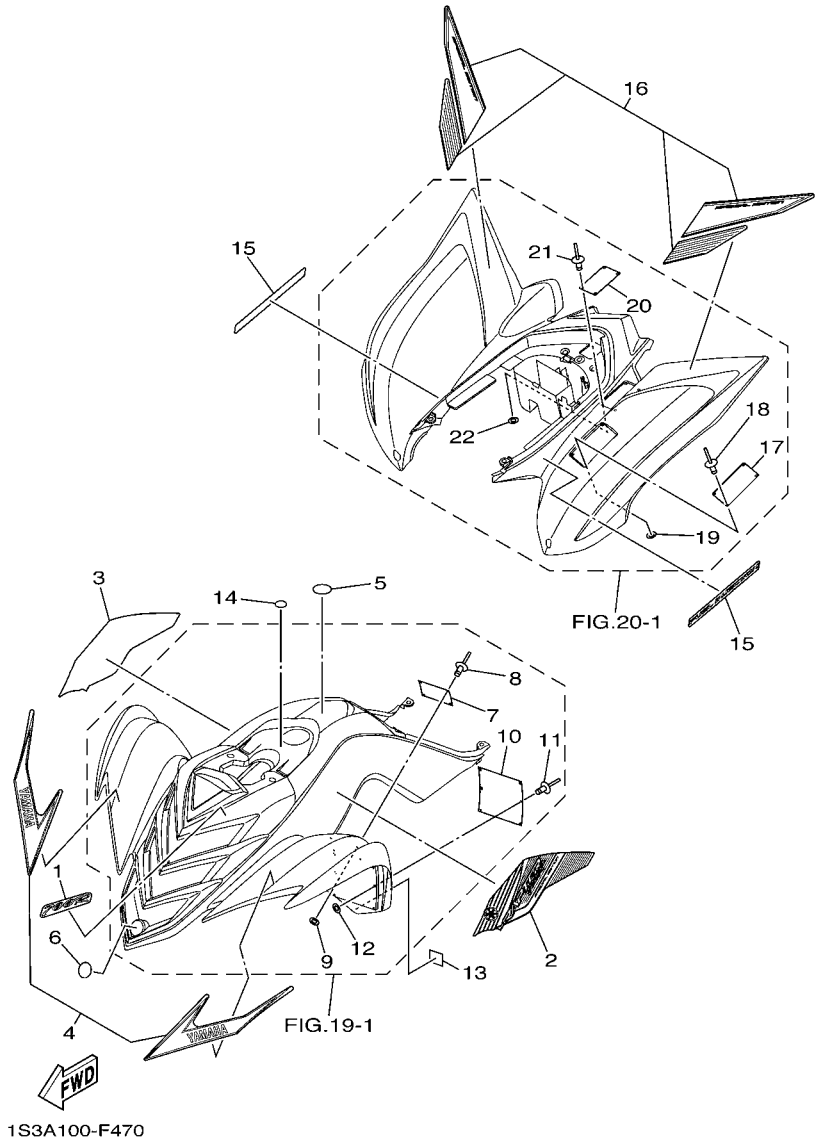

FIG. 47 EMBLEM & LABEL 3

REF. NO.	PART NO.	DESCRIPTION	USA	CAN	EUR	OCE		REMARKS
1	1S3–21565–40	EMBLEM, 2			1			
2	1S3–21569–40	GRAPHIC 1			1			
3	1S3–21579–40	GRAPHIC 2			1			
4	1S3–2157A–10	GRAPHIC SET, FRONT FENDER			1			
5	5D3–2164B–00	EMBLEM,3D			1			
6	5KM–2175B–00	TUNING FORK MARK			1			
7	5FK–21697–00	LABEL, CAUTION 2			1			
8	90267–32004	RIVET, BLIND			4			
9	90201–03008	WASHER, PLATE			4			
10	5FK–21568–00	LABEL, WARNING			1			
11	90267–32004	RIVET, BLIND			6			
12	90201–03008	WASHER, PLATE			6			
13	4GB–2155A–00	MARK,EC			1			
14	3ME–2415E–01	LABEL, CAUTION			1			
15	1S3–2163G–10	EMBLEM 1			2			
16	1S3–2165A–60	GRAPHIC SET,REAR FENDER			1			
17	5LP–21696–M0	LABEL, CAUTION			1			
18	90267–32004	RIVET, BLIND			4			
19	90201–03008	WASHER, PLATE			4			
20	5FK–2151H–00	LABEL 5			1			
21	90267–32004	RIVET, BLIND			4			
22	90201–03008	WASHER, PLATE			4			

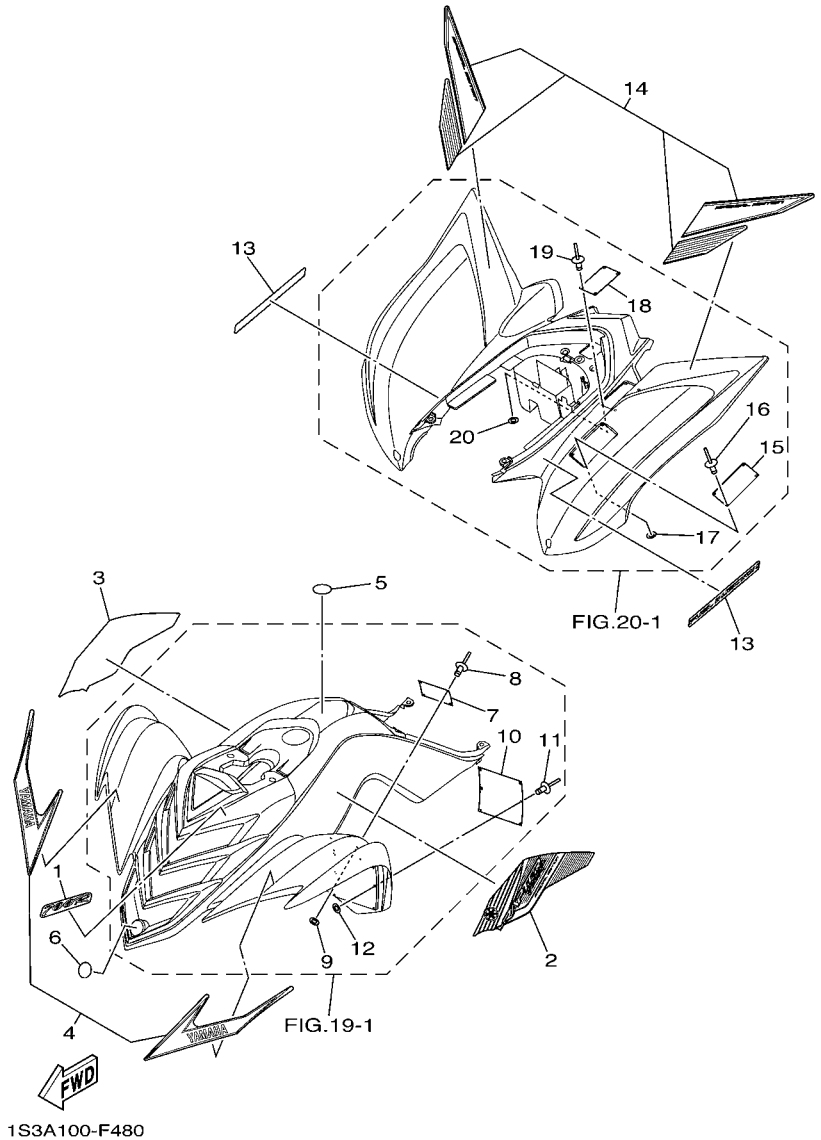

FIG. 48 EMBLEM & LABEL 4

REF. NO.	PART NO.	DESCRIPTION	USA	CAN	EUR	OCE		REMARKS
1	1S3–21565–40	EMBLEM, 2				1		
2	1S3–21569–30	GRAPHIC 1				1		
3	1S3–21579–30	GRAPHIC 2				1		
4	1S3–2157A–10	GRAPHIC SET, FRONT FENDER				1		
5	5D3–2164B–00	EMBLEM,3D				1		
6	5KM–2175B–00	TUNING FORK MARK				1		
7	5FE–21697–01	LABEL, CAUTION 2				1		ENGLISH
8	90267–32004	RIVET, BLIND				4		
9	90201–03008	WASHER, PLATE				4		
10	5FE–21568–11	LABEL, WARNING				1		ENGLISH
11	90267–32004	RIVET, BLIND				6		
12	90201–03008	WASHER, PLATE				6		
13	1S3–2163G–10	EMBLEM 1				2		
14	1S3–2165A–60	GRAPHIC SET,REAR FENDER				1		
15	5LP–21696–00	LABEL, CAUTION				1		EINGLISH
16	90267–32004	RIVET, BLIND				4		
17	90201–03008	WASHER, PLATE				4		
18	5FE–2151H–01	LABEL 5				1		ENGLISH
19	90267–32004	RIVET, BLIND				4		
20	90201–03008	WASHER, PLATE				4		

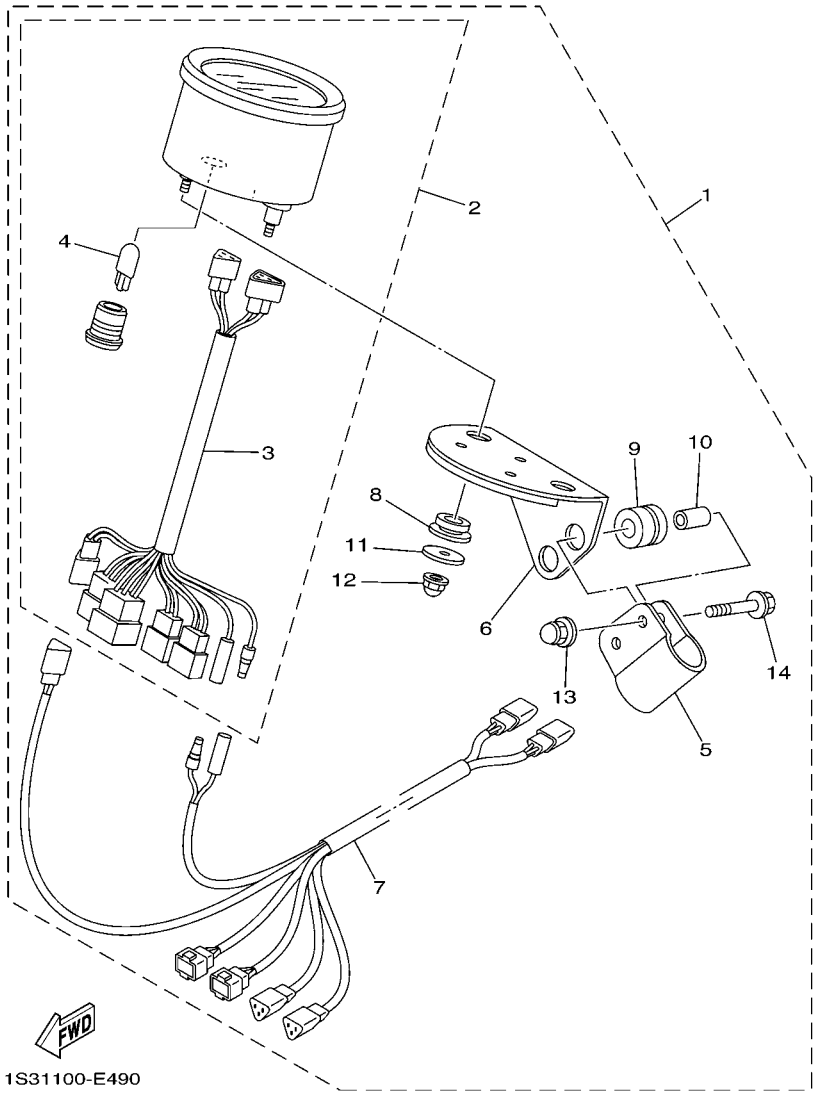

FIG. 49 ALTERNATE FOR METER

REF. NO.	PART NO.	DESCRIPTION	USA	CAN	EUR	OCE		REMARKS
1	1S3–W0081–00	SPEEDOMETER KIT		1				AP
2	1S3–83580–00	.SPEEDOMETER ASSY		1				
3	5LP–83509–00	..SOCKET CORD ASSY		1				
4	4R0–83517–00	..BULB (12V-3.4W T10)		1				
5	5LP–8354B–00	.BRACKET, METER		1				
6	5LP–8354C–00	.BRACKET, METER		1				
7	1S3–82509–00	.WIRE, SUB LEAD		1				
8	90480–13567	.GROMMET		2				
9	90480–14182	.GROMMET		2				
10	90387–06697	.COLLAR		2				
11	90201–052E8	.WASHER, PLATE		2				
12	90176–05054	.NUT, CROWN		2				
13	90176–06055	.NUT, CROWN		2				
14	95817–06030	.BOLT, FLANGE		2				

NUMERICAL INDEX

PART NO.	GRID NO.
1S3–11101–00	B – 2
5VK–1111F–00	B – 6
4G0–11133–11	B – 2
1S3–11165–00	B – 15
1S3–11166–00	B – 15
3B4–11181–00	B – 2
1S3–11185–00	B – 2
1S3–11186–00	B – 2
214–11198–01	B – 9
1S3–11310–00	B – 3
1S3–1131E–00	B – 2
1S3–11351–00	B – 3
1S3–11395–00	B – 3
1S3–11400–00	B – 4
1S3–11401–09	B – 4
1S3–11422–00	B – 4
1S3–11454–00	B – 4
1S3–11464–00	B – 4
1S3–11531–00	B – 4
1S3–11536–00	B – 4
1S3–11603–10	B – 4
1S3–11631–10	B – 4
5VK–11633–00	B – 4
1S3–11651–00	B – 4
1S3–11681–00	B – 4
5VK–12111–00	B – 5
1S3–12113–00	B – 5
3YF–12116–00	B – 5
3YF–12117–01	B – 5
4G0–12118–00	B – 5
5H0–12119–00	B – 5
5VK–12121–00	B – 5
5VK–12146–00	B – 5
5VK–12151–00	B – 5
5XT–12159–00	B – 5
5VK–12161–00	B – 5
1S3–12170–00	B – 6
1S3–12176–00	B – 6
3TB–12210–00	B – 6
4DW–12213–00	B – 6
5VK–12231–00	B – 6
1S3–12241–00	B – 6
1S3–12280–00	B – 6
5VK–12284–00	B – 6
1S3–12290–00	B – 6
1S3–12405–00	B – 8
1S3–1240A–00	B – 8
5VK–12410–00	B – 8

PART NO.	GRID NO.
1S3–12413–00	B – 8
1S3–12420–00	B – 7
1S3–12421–00	B – 7
1S3–12422–00	B – 7
1S3–12428–00	B – 7
1S3–12436–00	B – 7
11H–12438–10	B – 7
1S3–1243A–00	B – 13
1S3–1243E–00	B – 13
1S3–12450–00	B – 7
5VK–12459–00	B – 7
22W–12462–00	B – 8
1S3–12465–00	B – 8
1S3–12467–00	C – 12
1S3–12469–00	B – 7
1AA–12535–00	B – 8
1S3–12577–00	B – 7
1S3–12578–00	B – 8
1S3–12579–00	B – 8
583–13113–00	B – 9
1S3–13132–00	B – 10
1S3–13160–00	B – 13
1S3–13171–00	B – 9
5LP–13300–00	B – 9
3AJ–13325–00	B – 9
1S3–13327–00	B – 9
5LP–13329–00	B – 9
1S3–13356–00	B – 9
1S3–13410–00	B – 9
1S3–13416–00	B – 10
4X7–13440–01	B – 9
1S3–13447–00	B – 9
1S3–13464–00	C – 15
1S3–13465–00	C – 15
1S3–13493–00	B – 13
1S3–13543–00	B – 13
1S3–13545–00	B – 11
8FP–13556–00	B – 13
5VK–13586–00	B – 11
1S3–13750–00	B – 13
5VK–13761–00	B – 13
1S3–13907–02	D – 9
1S3–13971–00	D – 9
4BH–14134–00	B – 13
4WV–14147–10	B – 13
1UY–14155–00	B – 13
1S3–14161–00	B – 13
8CC–14216–10	B – 13

PART NO.	GRID NO.
5JW–14348–00	B – 13
1S3–14411–00	B – 11
1S3–14412–01	B – 11
31A–14419–00	D – 10
4BR–14419–00	B – 11
5KM–14419–00	B – 11
31A–14435–00	B – 11
	D – 10
5GH–14436–00	B – 11
1S3–14451–00	B – 11
1S3–14453–00	B – 11
10M–14457–00	B – 11
1S3–14457–00	B – 11
59V–14457–00	B – 11
1S3–14458–00	B – 11
1S3–14459–01	B – 11
5VX–14503–00	B – 13
1S3–14611–00	B – 14
1S3–14612–00	B – 14
3YF–14613–01	B – 14
1S3–14621–01	B – 14
1S3–14628–00	B – 14
1S3–14710–10	B – 14
3YF–14714–00	B – 14
5LP–14714–00	B – 14
1S3–14728–00	B – 14
1S3–14752–00	B – 14
1S3–15100–01	B – 15
1S3–15113–00	C – 2
1S3–15118–00	C – 2
1S3–15189–00	C – 2
4JT–15381–01	B – 15
1S3–15383–00	B – 15
1S3–15411–00	C – 2
1S3–15421–00	C – 2
1S3–15431–00	C – 2
1S3–15441–00	C – 2
1S3–15451–00	C – 2
1S3–15462–00	C – 2
1S3–1546C–00	C – 2
1S3–15484–00	E – 12
1S3–15515–00	C – 3
1S3–15517–00	C – 3
1VJ–15522–00	C – 3
1S3–15560–00	C – 3
5VK–15590–00	C – 3
1S3–16111–00	C – 4
1S3–16150–00	C – 4

PART NO.	GRID NO.
2JN–16154–00	C – 4
5TA–16321–00	C – 4
4X7–16325–00	C – 4
5TG–16331–00	C – 4
3LD–16340–01	C – 4
132–16346–00	C – 8
1S3–16351–00	C – 4
4XV–16356–01	C – 4
1S3–16371–00	C – 4
5EB–16382–00	C – 4
5JG–16383–00	C – 4
5JG–16384–00	C – 4
4X7–16385–00	C – 4
1S3–17121–00	C – 6
1S3–17131–00	C – 6
1S3–17141–00	C – 6
1S3–17151–00	C – 6
1S3–17211–00	C – 6
1S3–17221–00	C – 6
1S3–17231–00	C – 6
1S3–17241–00	C – 6
1S3–17243–00	C – 7
1S3–17251–00	C – 6
1S3–17253–00	C – 7
1S3–17285–00	C – 6
1S3–17401–00	C – 6
1S3–17402–00	C – 6
1S3–17430–00	C – 7
1S3–17432–00	C – 7
1S3–17466–00	C – 2
1S3–17471–00	C – 7
1S3–18101–00	C – 8
1S3–18110–10	C – 9
5YT–18113–00	C – 9
1S3–18122–00	C – 8
1S3–18140–00	C – 8
5JW–18144–00	C – 8
1S3–18172–00	C – 8
3XJ–18173–10	C – 8
3XJ–18178–00	C – 8
3XJ–18182–00	C – 8
3XJ–18184–00	C – 8
4EW–18185–00	C – 8
5LP–18337–01	C – 8
1S3–18380–00	C – 8
5LP–18431–00	C – 9
1S3–18501–00	C – 8
1S3–18502–00	C – 8

PART NO.	GRID NO.
1S3–18503–00	C – 8
1S3–18541–00	C – 8
5VK–18699–00	C – 8
1S3–21101–28	C – 10
1S3–21190–29	C – 10
1S3–21274–00	F – 3
1S3–21315–00	C – 10
1S3–21316–00	C – 10
1S3–21317–00	C – 10
22F–2139X–00	F – 4
1S3–2140A–00	C – 11
	C – 13
1S3–21471–00	C – 10
1S3–21513–00	C – 12
1S3–21514–00	C – 12
5FK–2151H–00	F – 9
5FE–2151H–01	F – 7
	F – 8
	F – 10
4WU–2151H–10	F – 8
1S3–21541–00	C – 12
1S3–21556–D0	C – 12
4GB–2155A–00	F – 9
1S3–21565–40	F – 7
	F – 8
	F – 9
	F – 10
5FK–21568–00	F – 9
5FE–21568–01	F – 7
	F – 8
4WU–21568–10	F – 8
5FE–21568–11	F – 10
1S3–21569–30	F – 7
	F – 8
	F – 10
1S3–21569–40	F – 9
1S3–21579–30	F – 7
	F – 8
	F – 10
1S3–21579–40	F – 9
1S3–2157A–10	F – 7
	F – 8
	F – 9
	F – 10
5TG–21621–00	C – 13
1S3–2163A–00	C – 13
1S3–2163E–00	C – 13
1S3–2163G–10	F – 7

PART NO.	GRID NO.
1S3–2163G–10	F – 8
	F – 9
	F – 10
1S3–21643–00	C – 14
1S3–21644–00	C – 14
5D3–2164B–00	F – 7
	F – 8
	F – 9
	F – 10
1S3–2164F–00	C – 13
5TG–2164G–00	C – 13
1S3–2164H–00	C – 13
1S3–2164J–00	C – 13
1S3–2165A–60	F – 7
	F – 8
	F – 9
	F – 10
5TG–21691–00	C – 13
5LP–21696–00	F – 7
	F – 8
	F – 10
5LP–21696–B0	F – 8
5LP–21696–M0	F – 9
5FK–21697–00	F – 9
5FE–21697–01	F – 7
	F – 8
	F – 10
3JM–21697–10	F – 8
1S3–2171A–B0	C – 12
1S3–21750–00	C – 15
5KM–2175B–00	F – 7
	F – 8
	F – 9
	F – 10
5LP–21761–01	C – 15
1S3–2177C–10	B – 12
5KM–21871–00	C – 15
1S3–21875–00	C – 15
1S3–22110–00	D – 2
4X7–22129–00	D – 2
5YT–22129–00	D – 3
1S3–22141–00	D – 2
3YF–22149–00	D – 2
1S3–22151–00	D – 3
1S3–22153–00	D – 4
5TG–22178–00	C – 10
1S3–2217A–00	D – 3
1S3–2217F–00	D – 3

PART NO.	GRID NO.
1S3–22184–00	D – 2
1S3–2219X–00	D – 3
1S3–22210–30	D – 5
1S3–22210–40	D – 5
1S3–22210–50	D – 5
4AA–22259–40	D – 5
4AA–22259–70	D – 5
4AA–22259–80	D – 5
1S3–22417–00	D – 2
1S3–22475–00	D – 2
1S3–23147–01	D – 2
1S3–23317–00	D – 4
1S3–23350–10	D – 7
1S3–23350–20	D – 7
1S3–23350–30	D – 7
1S3–23501–00	D – 8
1S3–23502–00	D – 8
5YT–23517–00	D – 7
5TG–23540–00	D – 7
5TG–23550–00	D – 7
5TG–23570–00	D – 7
5LP–23579–00	D – 7
5TG–23580–00	D – 7
1UY–23812–00	D – 6
1S3–23813–00	D – 6
8K1–23814–00	D – 6
5TG–23816–00	D – 6
1S3–23831–00	D – 6
1S3–23841–00	D – 6
1S3–23845–00	D – 6
1UY–23868–01	D – 6
5GT–23872–00	C – 10
1UY–23894–01	D – 6
1S3–24110–00	D – 9
4EW–2412F–00	D – 9
1S3–2413X–00	D – 10
1S3–2414H–00	D – 9
1S3–2414J–00	D – 10
3ME–2415E–01	F – 9
4SH–2416E–00	F – 8
1S3–2416F–00	D – 9
1S3–24181–00	D – 9
1S3–24182–00	D – 10
1S3–24183–00	D – 10
1S3–24278–00	D – 9
1S3–24279–00	D – 9
1S3–24452–00	D – 9
1S3–24486–00	D – 9

PART NO.	GRID NO.
1S3–24491–00	D – 9
2FJ–24610–00	D – 9
1S3–24710–30	D – 11
1S3–24723–00	D – 11
509–24724–00	D – 11
1S3–24731–30	D – 11
22W–24741–00	D – 11
1S3–25111–10	D – 12
5LP–25117–00	D – 12
1S3–25127–00	D – 12
5TG–2514A–00	D – 14
5LP–25180–20	D – 12
1S3–25311–00	D – 2
1S3–25317–00	D – 2
1S3–25381–10	D – 15
1S3–25383–10	D – 15
1S3–25386–00	D – 15
5LP–25390–20	D – 15
1S3–25415–00	E – 2
5TG–25438–10	D – 15
5D3–25689–00	F – 2
1S3–25712–00	E – 2
1S3–25721–00	D – 2
1S3–25726–00	F – 2
1S3–25727–00	F – 2
1S3–2580E–00	E – 8
1S3–2580T–00	D – 13
1S3–2580U–00	D – 13
1S3–2580V–10	E – 2
5UG–25827–00	E – 2
1S3–25828–00	D – 13
5GH–25828–00	E – 2
1AE–2582A–00	E – 8
3GD–2582T–10	D – 13
1S3–2582W–10	E – 2
5MV–25833–00	E – 6
5UG–25833–00	E – 3
5D3–2583T–00	E – 6
5D3–25852–00	E – 6
3XP–25852–50	E – 8
2VN–25854–00	E – 8
4TT–25854–00	E – 6
2VN–25855–00	E – 8
2GU–25866–00	E – 6
5LP–25867–00	E – 6
1S3–25871–00	E – 6
1S3–25872–00	E – 6
5TG–25873–00	E – 6

PART NO.	GRID NO.
1S3–25874–00	E – 8
5TG–25875–00	D – 8
5TG–25876–00	D – 8
1S3–25886–00	D – 4
5JJ–25894–00	E – 8
1S3–25895–00	E – 8
5UG–25898–00	E – 2
5MV–2589F–00	E – 6
4NK–2589H–00	E – 6
3JD–25917–00	D – 13
	E – 2
3JD–25919–00	D – 13
4GY–25919–50	E – 2
5GH–25924–00	E – 2
5TG–25924–00	D – 13
3JD–25926–00	D – 13
	E – 2
1UY–25926–51	D – 13
	E – 2
1UY–25937–51	D – 13
	E – 2
1UY–25938–51	D – 13
	E – 2
3JD–25961–00	D – 13
	E – 2
1S3–25972–00	E – 2
1S3–25973–00	E – 2
1UY–25974–51	E – 2
5TG–25977–50	E – 3
1S3–25978–00	E – 2
1S3–26111–00	E – 4
1S3–26113–00	E – 4
1S3–26124–00	E – 4
1NV–26129–00	E – 4
1S3–26150–00	E – 4
5LP–26241–00	E – 4
4KB–26250–20	E – 4
1UY–26259–00	E – 6
1NV–2625G–01	E – 4
4KB–2628F–20	E – 4
4KB–2628G–00	E – 4
1S3–26292–00	E – 8
1NV–26304–00	E – 4
1S3–26311–00	E – 4
1S3–26335–00	E – 4
1S3–26341–00	E – 5
31A–26372–00	E – 5
1S3–2637E–00	E – 4

PART NO.	GRID NO.
1NV–26398–00	E – 4
371–27114–00	D – 11
1S3–27211–10	E – 7
4SS–27218–00	E – 8
2YK–27222–00	E – 8
1S3–27411–00	E – 7
1S3–27421–00	E – 7
1S3–27453–00	E – 8
5TG–28100–10	C – 11
1NV–2811A–01	C – 11
5LP–2819R–00	F – 7
1S3–2845N–00	E – 10
1S3–2845R–00	E – 10
1S3–2845R–10	E – 10
1S3–2845R–20	E – 10
1S3–81410–00	E – 11
1S3–81450–00	E – 11
3AJ–81801–00	E – 12
3KS–81809–00	E – 12
1S3–81815–00	E – 12
3AJ–81826–00	E – 12
4XV–8182A–00	E – 12
11H–81844–00	E – 12
1FK–81847–00	E – 12
4NK–81850–00	E – 12
4G0–81871–00	E – 12
1S3–81890–00	E – 12
1S3–81940–00	F – 4
5DM–81950–00	F – 4
5EA–81950–20	F – 4
5VK–81950–30	F – 4
5BN–81960–00	F – 3
5GJ–82100–01	F – 3
1S3–82115–00	F – 4
1S3–82116–10	F – 4
5TG–82121–10	F – 4
1S3–82122–00	F – 4
1S3–82123–00	F – 3
1S3–82128–00	F – 3
1S3–82129–00	F – 3
1S3–8212B–00	F – 3
116–82131–00	C – 11
2GH–82151–00	F – 4
5JJ–82151–10	F – 4
5JJ–82151–30	F – 4
5GT–82180–00	F – 4
3TB–82310–00	F – 3
5VK–82370–00	F – 3

PART NO.	GRID NO.
1C7–82380–00	B – 13
1S3–82509–00	F – 11
5LP–82510–00	F – 4
1S3–82530–00	F – 4
3GB–82540–01	F – 3
5LP–82540–01	F – 3
1S3–82541–00	F – 4
5GT–82560–00	F – 4
3HN–82569–00	F – 4
5PS–82576–01	F – 4
3HN–82579–00	F – 4
1S3–82590–10	F – 4
5YT–82910–00	F – 2
5YT–82911–00	F – 2
4V4–82913–00	E – 4
5TG–82913–00	F – 2
5KM–82917–00	F – 2
5LP–83509–00	F – 11
4R0–83517–00	F – 11
1S3–83530–00	F – 4
5LP–8354B–00	F – 11
5LP–8354C–00	F – 11
1S3–83580–00	F – 11
1S3–83755–00	F – 3
2HT–83912–00	F – 2
5D3–83922–00	E – 6
5TG–83923–00	F – 2
437–83936–01	E – 4
1S3–83973–00	F – 2
5D3–83980–00	E – 6
5TG–84110–12	E – 13
1S3–8413J–00	E – 13
5TG–84140–01	E – 13
1S3–84165–00	E – 13
1S3–84166–00	E – 13
5TG–84310–12	E – 13
4KB–84314–01	E – 13
5TG–84340–01	E – 13
1S3–84703–00	E – 15
1S3–84710–00	E – 14
	E – 15
1S3–84716–10	E – 14
	E – 15
1S3–84736–00	E – 14
	E – 15
1S3–84751–00	E – 15
2EK–85111–00	F – 6
1S3–85112–00	F – 6

PART NO.	GRID NO.
1S3–85122–00	F – 6
3Y6–85130–02	F – 6
449–85131–02	F – 6
1S3–85370–00	F – 5
1S3–85546–00	F – 3
5PS–85790–00	F – 3
5PS–85885–01	B – 13
5VU–85886–00	B – 11
1S3–8591A–00	F – 3
5D3–W0041–00	E – 6
1S3–W0042–50	E – 8
1S3–W0045–00	D – 13
1S3–W0045–10	D – 14
1S3–W0046–01	E – 2
3GD–W0047–00	E – 2
3LC–W0047–50	D – 13
1UY–W0048–50	D – 13
	E – 2
5TG–W0057–00	D – 13
5UG–W0057–00	E – 2
1S3–W0081–00	F – 11
1S3–W2151–10	C – 12
1S3–W215B–10	C – 12
1S3–W215C–10	C – 12
1S3–W215E–10	C – 12
1S3–W2161–10	C – 13
1S3–W216B–10	C – 13
1S3–W216C–10	C – 13
90101–06664	C – 8
90105–06078	B – 6
90105–06081	B – 15
90105–06082	B – 9
	B – 15
90105–06084	B – 12
	C – 12
	C – 13
	F – 3
90105–06142	C – 9
90105–07004	B – 6
90105–08074	C – 10
90105–08104	E – 3
90105–08142	B – 14
	E – 10
90105–08520	D – 14
90105–10103	E – 7
90105–10131	D – 7
90105–10132	D – 7
90105–10135	D – 7

PART NO.	GRID NO.
90105–12038	D – 5
90109–06169	B – 9
90109–06172	C – 12
	D – 3
90109–06198	C – 10
90109–06199	D – 4
90109–06798	F – 2
90109–067F4	D – 8
90109–08076	E – 2
90109–08082	D – 13
90109–08100	E – 10
90109–09002	B – 2
90109–09003	B – 2
90109–09005	B – 2
90109–10013	D – 15
90109–10018	D – 3
90109–10019	D – 5
90109–10020	D – 3
90109–12009	D – 3
90110–05030	B – 9
90110–05031	C – 2
	E – 11
90110–06182	C – 2
90110–06202	C – 12
90110–12001	D – 2
90111–06038	C – 13
90113–06055	E – 2
90114–10006	D – 12
90114–10013	D – 15
90119–06044	E – 8
90119–06152	C – 15
90119–10023	B – 3
90122–06010	B – 11
90123–08046	F – 2
90149–04278	E – 4
90149–05018	B – 9
90149–05299	C – 12
90149–06074	B – 15
90149–08018	C – 3
90149–10034	C – 10
90154–05013	C – 13
90154–06014	D – 14
90159–06029	C – 4
90170–06128	B – 5
90170–12054	D – 6
90170–12055	D – 6
90170–16326	B – 4
90170–20274	C – 4

PART NO.	GRID NO.
90171–10001	D – 6
	D – 8
90171–14002	D – 14
90171–16002	D – 15
90176–05054	F – 11
90176–06055	F – 11
90179–08148	F – 2
90179–16004	B – 4
90179–20007	C – 4
90179–22003	C – 7
90179–36003	E – 2
90183–05008	C – 12
90185–10011	C – 10
	D – 15
90185–10012	D – 3
	D – 5
	D – 7
90185–12007	D – 3
	D – 5
90185–14070	D – 6
90185–16002	D – 2
90201–03008	F – 7
	F – 8
	F – 9
	F – 10
90201–04027	D – 4
90201–04028	B – 11
90201–04030	F – 4
90201–05015	B – 14
90201–05019	B – 14
90201–05025	E – 14
	E – 15
90201–052E8	F – 11
90201–06033	D – 9
90201–06035	B – 14
90201–06076	C – 13
90201–06078	C – 12
	E – 13
90201–06089	C – 12
90201–06090	D – 9
90201–06093	C – 13
90201–063F3	D – 3
90201–08013	E – 3
90201–08043	C – 10
90201–08048	B – 14
90201–08083	E – 8
90201–082A6	C – 15
90201–08784	C – 14

PART NO.	GRID NO.
90201–10034	D – 3
90201–10035	D – 3
	D – 8
90201–10036	D – 5
90201–10037	D – 7
90201–10118	E – 6
	E – 9
90201–10614	C – 5
90201–12030	D – 3
90201–12032	D – 3
	D – 5
90201–12040	C – 8
90201–12541	B – 7
90201–12575	C – 9
90201–14226	D – 6
90201–14586	D – 14
90201–152P4	C – 7
90201–16013	B – 4
90201–16018	D – 2
90201–16023	D – 15
90201–177G4	C – 8
90201–20022	D – 14
90201–20276	C – 7
90201–266F6	E – 7
90201–286K9	C – 3
90208–20001	C – 4
90208–37001	E – 2
90209–06014	B – 11
90209–10229	D – 6
	D – 8
90209–22008	C – 6
90209–26008	C – 6
90214–22002	C – 6
90214–22003	C – 6
90214–26002	C – 6
90214–26003	C – 6
90215–16221	B – 4
90215–20006	C – 4
90215–25003	C – 7
90240–08124	E – 8
90252–03001	D – 15
90267–32004	F – 7
	F – 8
	F – 9
	F – 10
90267–47187	D – 4
90267–48138	B – 11
90269–05055	D – 10

PART NO.	GRID NO.
90269–06002	C – 12
	F – 4
90269–07011	D – 10
90280–05001	B – 4
90282–05005	B – 4
90282–07003	C – 4
90338–05008	D – 9
90338–07007	F – 2
90338–20183	C – 11
90338–23004	C – 11
	D – 2
90338–24260	C – 10
90338–26004	C – 10
90340–14003	C – 2
90340–14029	B – 9
90340–36001	C – 2
90380–10002	C – 3
90380–22111	D – 2
90381–15088	D – 7
90383–20032	D – 3
90383–20033	D – 3
90387–06074	C – 13
90387–06098	D – 9
90387–06136	C – 12
90387–06146	C – 12
90387–06153	C – 13
	E – 14
	E – 15
	F – 3
90387–06166	B – 8
90387–06168	F – 3
90387–061N6	C – 15
90387–06697	F – 11
90387–06M17	D – 9
90387–07598	E – 13
90387–08064	C – 10
90387–08073	B – 12
90387–090R0	D – 6
90387–100Y6	D – 7
90387–101R3	D – 7
90387–12010	D – 3
90387–12020	D – 5
90387–12021	D – 3
90387–12028	D – 3
	D – 5
90387–125K2	D – 3
90387–127W0	D – 5
90387–1504G	C – 7

PART NO.	GRID NO.
90387–150R1	D – 14
90387–16014	D – 2
90387–17009	B – 15
90387–20005	D – 14
90387–20021	C – 6
90387–22006	C – 6
90387–26004	C – 6
90387–26005	C – 6
90387–28008	C – 6
90387–28009	C – 7
90401–08004	B – 2
90401–10024	B – 9
90401–10159	E – 6
	E – 8
90430–05126	B – 9
90430–06014	B – 7
	B – 8
90430–08119	B – 2
90430–10148	F – 3
90430–10188	B – 9
90430–12202	F – 3
90430–14043	B – 10
90445–083J4	D – 9
90445–09777	C – 15
90445–09M30	C – 15
90445–11034	C – 15
90445–16007	D – 10
90450–22017	C – 15
90450–32015	B – 7
	B – 8
90450–59006	B – 11
90450–72003	B – 11
90460–75020	B – 11
90461–10004	F – 3
90461–10011	C – 2
	C – 7
90462–08046	C – 2
90464–12036	C – 11
90464–12045	C – 11
90464–13073	E – 4
90464–13077	F – 5
90464–14004	D – 9
90464–15157	E – 14
	E – 15
90464–15195	F – 5
90464–16013	F – 5
90464–20213	C – 11
90464–23041	C – 15

PART NO.	GRID NO.
90464–23041	E – 5
90464–66001	D – 9
90465–10098	F – 5
90465–13M11	F – 5
90467–08003	C – 15
90467–09006	B – 11
	B – 13
90467–10008	C – 15
90467–11044	E – 8
90467–11090	B – 13
90467–13062	B – 7
90467–14057	E – 8
90467–140A4	B – 15
90467–15012	B – 11
90467–160A4	B – 11
90467–220A1	B – 11
90468–16191	D – 6
90480–01017	D – 9
90480–13459	C – 15
90480–13567	F – 11
90480–14101	E – 14
	E – 15
90480–14102	C – 12
	E – 13
90480–14182	F – 11
90480–15009	E – 8
90480–18005	D – 9
90480–18330	B – 8
90480–24004	C – 15
90501–043E0	B – 10
90501–052G5	C – 8
90501–230E4	C – 4
90506–20380	E – 7
90508–18018	C – 4
90508–35007	C – 8
90560–06201	C – 13
91312–04006	B – 13
91312–04025	F – 4
91312–06010	B – 14
91312–06012	B – 9
91312–06016	F – 3
91312–06020	B – 7
91312–06025	B – 6
	C – 2
91312–06030	B – 2
91312–06035	B – 9
91312–06040	B – 3
91312–06095	B – 9

PART NO.	GRID NO.
91314–08035	B – 14
91314–08040	D – 2
91317–06016	C – 15
91401–16012	E – 8
91402–20020	D – 6
	D – 8
91402–30025	D – 14
92012–06010	E – 15
	F – 3
92012–06012	F – 2
92012–06025	C – 13
92012–06030	E – 11
92014–06016	F – 2
92017–08016	C – 14
	E – 8
92017–08020	C – 14
92017–08035	C – 14
	E – 8
92902–05100	E – 4
	F – 6
92902–05200	F – 6
92902–05600	E – 4
92902–06200	B – 14
92902–06600	B – 6
92902–08600	C – 4
92902–10200	D – 12
	D – 15
92903–08600	D – 2
92906–04100	E – 8
92906–04600	E – 8
92907–06600	B – 8
93101–12173	B – 7
93101–14164	C – 2
93101–25106	B – 4
93102–12106	C – 9
93102–12224	C – 8
93102–15212	C – 5
93102–22216	D – 12
93102–25081	C – 10
93102–25099	C – 10
93102–35393	C – 7
93104–09025	E – 4
93105–26026	D – 12
93106–22019	D – 2
93106–46003	D – 2
93109–20076	D – 3
93112–31011	D – 6
93210–07135	B – 9

PART NO.	GRID NO.
93210–07135	B – 15
93210–10197	B – 10
	C – 15
93210–13361	B – 9
93210–14369	C – 2
93210–15620	E – 8
93210–16629	C – 15
93210–207A0	C – 2
93210–21190	C – 15
93210–25755	C – 7
93210–33786	B – 7
93210–357A3	C – 2
93210–36769	D – 15
93210–41042	B – 8
93210–61750	B – 7
93210–64297	B – 9
93210–66001	D – 2
93210–71001	D – 2
93210–78544	B – 2
93210–96601	B – 2
93300–60804	C – 10
93306–00106	B – 7
93306–00304	C – 4
93306–00415	C – 7
93306–00431	C – 6
93306–00446	D – 12
93306–00502	B – 4
93306–07209	B – 6
93306–20231	D – 12
93306–20352	C – 10
93306–20481	B – 4
93306–20501	C – 6
93306–27803	C – 7
93306–30810	B – 4
93306–90509	C – 8
93306–90804	D – 2
93306–90805	D – 2
93310–84017	B – 4
93315–31502	C – 5
93317–11020	C – 4
93317–22237	D – 2
93410–67085	D – 2
93430–23054	E – 7
93440–10085	B – 2
93440–15012	C – 7
93440–25084	C – 6
93440–28062	C – 6
93450–24154	B – 4

PART NO.	GRID NO.
93503–08007	B – 9
93603–16219	B – 7
93608–30002	C – 8
93612–16254	B – 2
93700–06004	D – 3
	D – 7
9383G–14231	C – 7
93900–00022	D – 15
93900–00030	D – 12
94107–10015	D – 12
94110–09012	D – 15
94582–13098	D – 15
94591–57126	B – 6
94701–00330	B – 2
95022–06008	F – 4
95022–06010	B – 8
95022–06012	B – 14
	D – 4
95022–06020	B – 2
	B – 8
95022–06025	B – 7
	B – 10
95022–06030	B – 15
	C – 2
95022–06045	B – 8
95022–06050	B – 7
95022–06070	B – 15
95022–06090	B – 15
95022–06110	B – 7
95027–06025	C – 15
95302–05600	F – 6
95307–05700	E – 4
95307–06800	D – 9
95602–06100	F – 2
95602–06200	C – 12
	C – 13
95604–06100	E – 6
95607–05100	E – 4
95607–06200	C – 13
95607–08200	C – 14
95607–10200	C – 10
95612–08625	B – 2
95702–04500	F – 4
95702–06500	F – 5
95702–08500	B – 14
95702–10500	D – 12
	D – 15
95802–06010	E – 14

PART NO.	GRID NO.
95802–06010	E – 15
95802–06016	F – 5
95802–06020	F – 3
95802–06025	F – 3
95802–06030	B – 8
	F – 3
95802–06035	D – 9
95807–08016	C – 15
95812–06012	C – 9
95812–06014	C – 12
	C – 13
95812–06030	C – 12
	E – 12
	E – 13
95812–08045	C – 10
95812–10090	C – 10
95812–10110	C – 10
95817–06030	F – 11
95817–08014	C – 10
95817–10030	E – 7
95817–10055	C – 10
95822–06012	B – 3
95827–06020	C – 15
95827–06025	E – 6
95827–08016	C – 14
95827–08020	C – 14
95827–08030	D – 6
97002–05016	F – 2
97002–05020	F – 3
97017–06010	B – 8
97022–06014	C – 7
97022–06016	B – 6
97027–06025	C – 13
97027–08060	D – 6
97702–50016	E – 14
	E – 15
97707–30510	E – 13
98502–05018	E – 4
98502–05020	E – 4
98506–04012	E – 8
98507–05012	B – 13
98507–05020	E – 4
98507–06010	B – 13
98507–06012	B – 13
98702–06025	D – 9
98902–06010	B – 14
99001–07600	C – 4
99001–10600	C – 9

PART NO.	GRID NO.
99009–10400	C – 5
99009–11400	B – 9
99009–12400	B – 7
99009–17400	C – 8
99009–20400	C – 7
99009–30400	D – 7
99530–08016	B – 15
99530–10114	B – 10
	B – 15
	C – 2
	C – 15
99530–10120	C – 2
99530–14016	B – 15

PART NO.	GRID NO.